WALL-MOUNTED & FULLY DUCTED
9000 TWIN-S

OWNER'S MANUAL

24V Thermostat Conversion Kit Option

TECHNICIAN'S MANUAL LOCATED DIRECTLY AFTER OWNER MANUAL

Tech Support: 1 (800) 343-9463, ext. 801
Hours: Monday through Friday, 7 AM - 4 PM

CELLARCOOL

Conforms to ANSI/UL Std 427

Certified to CAN/CSA Std C22.2 No. 120

We manufacture, test and certify 100% of our wine cooling units in the USA. By sourcing the best components and closely controlling our manufacturing processes, we can assure the highest-quality, lowest defect manufacturing rates in the industry.

Copyright © 2019. CellarCool. All rights reserved.

CellarCool copyrights this manual, the product design, and the design concepts, with all rights reserved. Your rights with regard to the hardware and manual are subject to the restrictions and limitations imposed by the copyright laws of the USA. Under copyright laws, this manual may not be copied, reproduced, translated, transmitted, or reduced to any printed or electronic medium or to any machine-readable form, for any purpose, in whole or in part, without the written consent of CellarCool.

Every effort has been made to ensure that the information in this manual is accurate. CellarCool is not responsible for printing or clerical errors.

CellarCool reserves the right to make corrections or improvements to the information provided and to the related hardware at any time, without notice.

Vinothèque and CellarCool are registered trademarks, and ECE is a trademark of CellarCool. All rights reserved.

Mention of third-party products is for informational purposes only and constitutes neither an endorsement nor a recommendation. CellarCool assumes no liability with regard to the performance or use of these products.

TABLE OF CONTENTS

Introduction 2

Before You Start 3

Receiving & Inspecting the System 4

Quick Reference Guide

- Wall-Mounted Evaporator Unit 5
- Fully Ducted Evaporator Unit 6
- Wall-Mounted Twin Specifications 7
- Fully Ducted Twin Specifications 8
- Condensing Unit Specifications 9

Drain Line 10

System Operation 13

CellarCool Troubleshooting Guide 16

Maintenance Schedule 19

Technical Assistance & Accessories 20

Installation Terms and Conditions 21

INTRODUCTION

Customer Service

Thank you for purchasing a CellarCool cooling system. We strive to provide the highest-quality products and the best possible customer service. If you have any questions about your system, please call us at 1-800-343-9463 or visit cellarcool.com.

Using the Manual

This owner's manual is intended to assist in the proper maintenance of the cooling system. In order to ensure the longevity of your cooling unit, the equipment should be installed as outlined in the technician's manual. It is also vital to establish a proper care and maintenance schedule. Please read and review this manual carefully and keep it for future reference.

What is the CellarCool Cooling System?

The CellarCool cooling system is a specialized refrigeration system designed for one purpose only: to maintain the optimal temperature and humidity levels conducive to the proper storage and aging of fine wines. This system produces minimal in-cellar noise and has the most lenient exhaust requirements. An exterior housing is required for outdoor condensing unit installations.

How Does the Cooling System Work?

Similar to the air conditioning systems used for homes, the evaporator unit and condensing units are installed in separate locations and are connected by a refrigerant line set. The evaporator portion is commonly installed in the wine cellar, with the condensing unit is located either outside or in a remote indoor location that is ventilated. An exterior housing is required for outdoor condensing unit installations.

Temperature Setting

The system is designed to maintain a cellar temperature of 55°F as long as the ambient temperature does not exceed 110°F.

WARRANTY REGISTRATION

In order to activate the warranty of your system, the verification and operational documentation must be completed by the certified refrigeration technician installing your system and submitted via mail, fax, or e-mail.

Mail to:
CellarCool
ATTN: Warranty Registration
1738 E. Alpine Avenue
Stockton, CA 95205-2505
USA

Fax to:
209-466-4606

Scan and email to:
warranty@cellarcool.com

BEFORE YOU START

1-800-343-9463

1. **Inspect all components prior to installation.** If damage is found, please contact your distributor or CellarCool Customer Service at 1-800-343-9463.
2. Each evaporator unit **requires a dedicated 115V, 15-amp circuit**. The condensing unit **requires a dedicated 230V single-phase 15-amp circuit**. Use a surge protector with the unit. **Do not use a GFI** (ground fault interrupter) line.
3. You are **REQUIRED** to **install a drain line** to remove condensation from each evaporator unit.
4. ***The warranty is not active until a warranty checklist has been received, reviewed, and approved.***
5. The system is intended **for use in properly designed and constructed wine cellars.** Hire a professional wine storage consultant with a valid contractor's license to build your wine cellar.
6. CellarCool requires that all split systems be installed by a certified HVAC-R technician only. NATE or equivalent is recommended.
7. ***It is vital that the units be set apart and oriented so that the return air from one unit does not recirculate into the supply air of the other unit.***

If you encounter a problem with your CellarCool system, please refer to the Troubleshooting Guide. If you have any further questions or concerns, or need technical assistance, please contact CellarCool's Customer Service at 1-800-343-9463. Please be sure all testing has been completed prior to contacting Customer Service. Please have your results ready for your representative.

RECEIVING & INSPECTING THE SYSTEM

- Use caution when lifting and check package for damage.
- Lift only at the designated hand-hold locations on the shipping container, or fully support the unit from underneath. A shipment may include one or more boxes containing accessories.
- Before opening the container, inspect the packaging for any obvious signs of damage or mishandling.
- Write any discrepancy or visual damage on the bill of lading before signing.
- Allow the condensing unit to sit for 24 hours prior to start-up. The condensing unit can be placed in the installation location, piped, and evacuated during this time.

NOTE: CellarCool units are manufactured in the USA and tested prior to shipment.

- Review the packing slip to verify contents.
- Check the model number to ensure it is correct.
- Check that all factory options ordered are listed.

If any items listed on the packing slip do not match your order information, contact CellarCool Customer Service immediately.

Check all shipped boxes for the following contents:

Master Evaporator Box

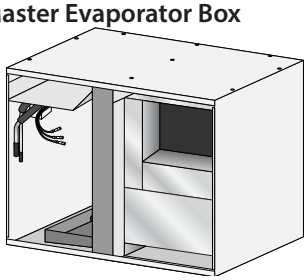

- (1) Master WM/FD Twin evaporator unit
- (1) Wall-mounted evaporator installation template

Documentation bag (master):

- WM/FD 9000 Twin-S owner's manual
- WM/FD 9000 Twin-S technician's manual
- R-134a split system warranty checklist

Evaporator installation hardware bag (master)

- (2) ½" x ½" 90° nylon barbed fitting
- (1) ½" barbed tee
- (1) Double-D strain relief
- (4) ¾" adhesive cable tie mounts
- (2) Small cable ties
- (4) #8 x 1¾" hex-head screws

Slave Evaporator Box

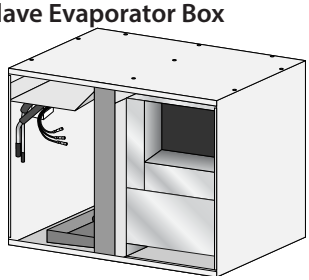

- (1) Slave WM/FD Twin evaporator unit
- (1) Wall-mounted evaporator installation template
- (1) Evaporator installation hardware bag

- (2) ½" x ½" 90° nylon barbed fitting
- (1) ½" barbed tee
- (1) Double-D strain relief
- (4) ¾" adhesive cable tie mounts
- (2) Small cable ties
- (4) #8 x 1¾" hex-head screws

Condensing Unit Box

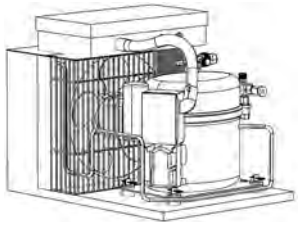

- (1) Condensing unit
- (1) Condensing unit accessory kit:
  - (1) ¼" filter drier
  - (1) ¼" sight glass

Ducted Master Accessory Kit Box

(1) Duct plenum

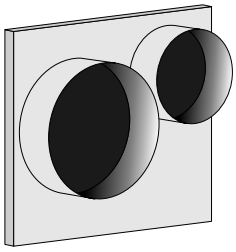

OR

Wall-Mounted Master Accessory Kit Box

(1) Filter grille

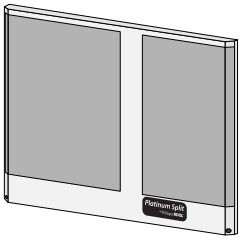

Ducted Slave Accessory Kit Box

(1) Duct plenum

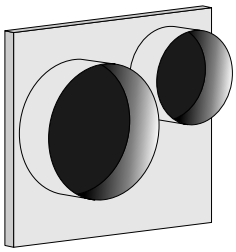

OR

Wall-Mounted Slave Accessory Kit Box

(1) Filter grille

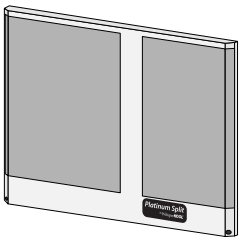

Please leave the unit in its original box until you are ready for installation. This will allow you to move the product safely without damaging it. When you are ready to remove the product from the box, refer to the installation instructions.

TIP: Save your box and all packaging materials. They provide the only safe means of transporting/shipping the unit.

QUICK REFERENCE GUIDE

Wall-Mounted — Front / Side View

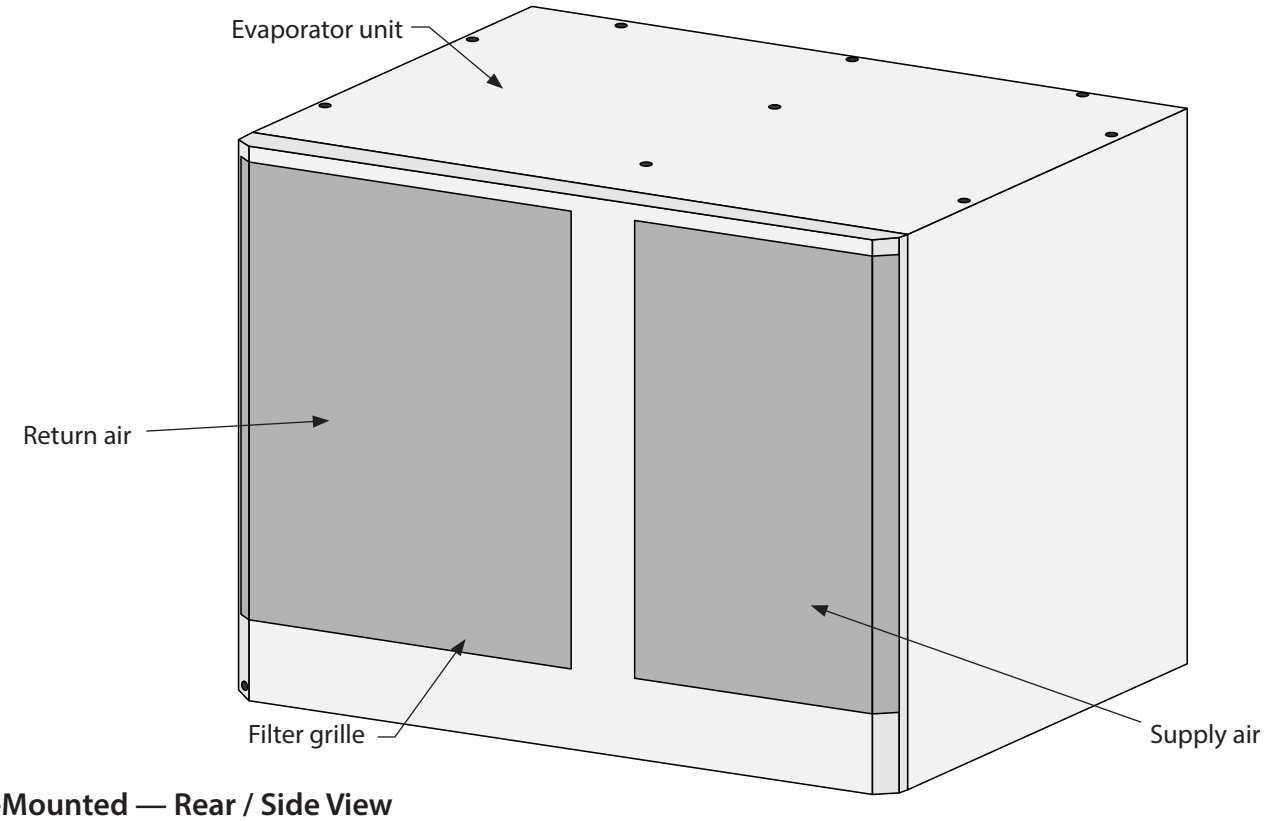

Wall-Mounted — Rear / Side View

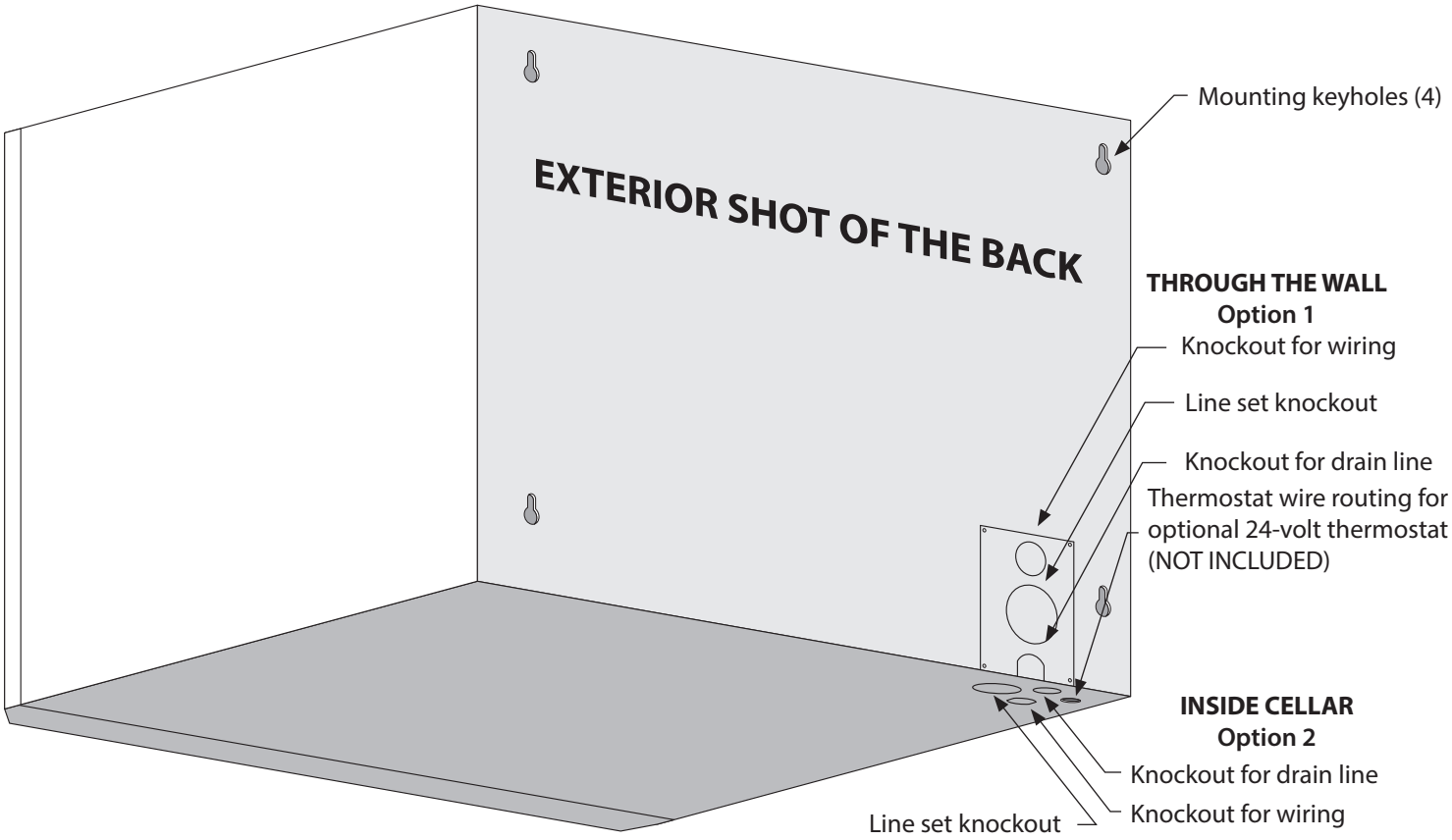

Fully Ducted — Front / Side View

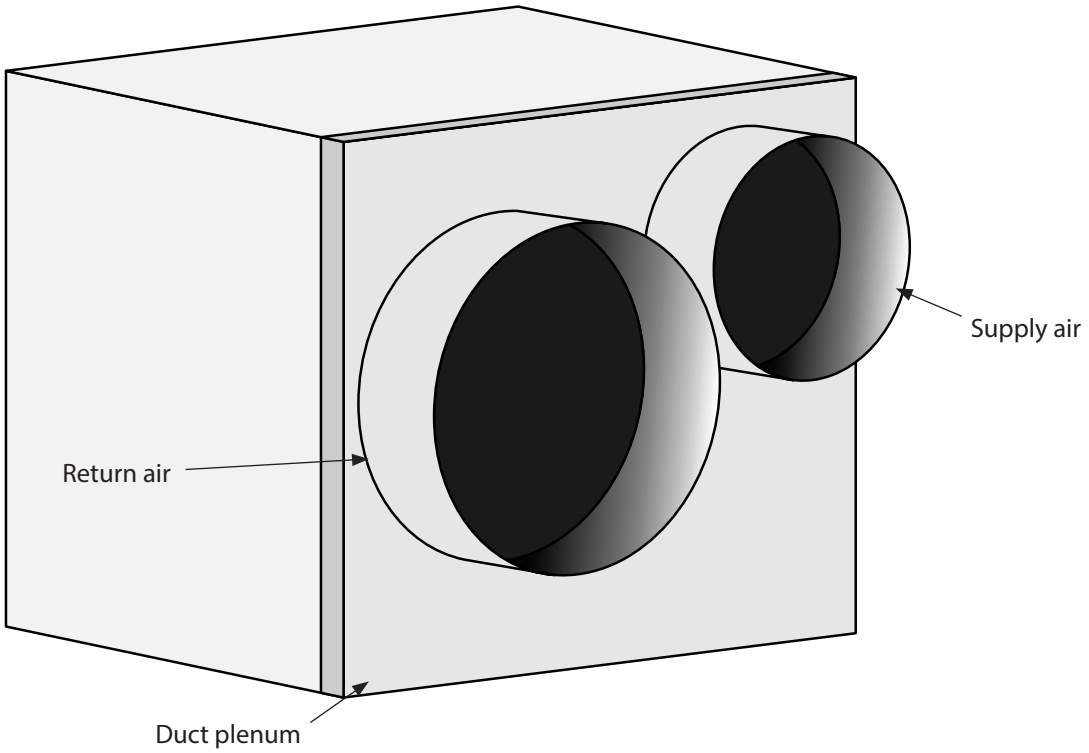

Fully Ducted — Rear / Side View

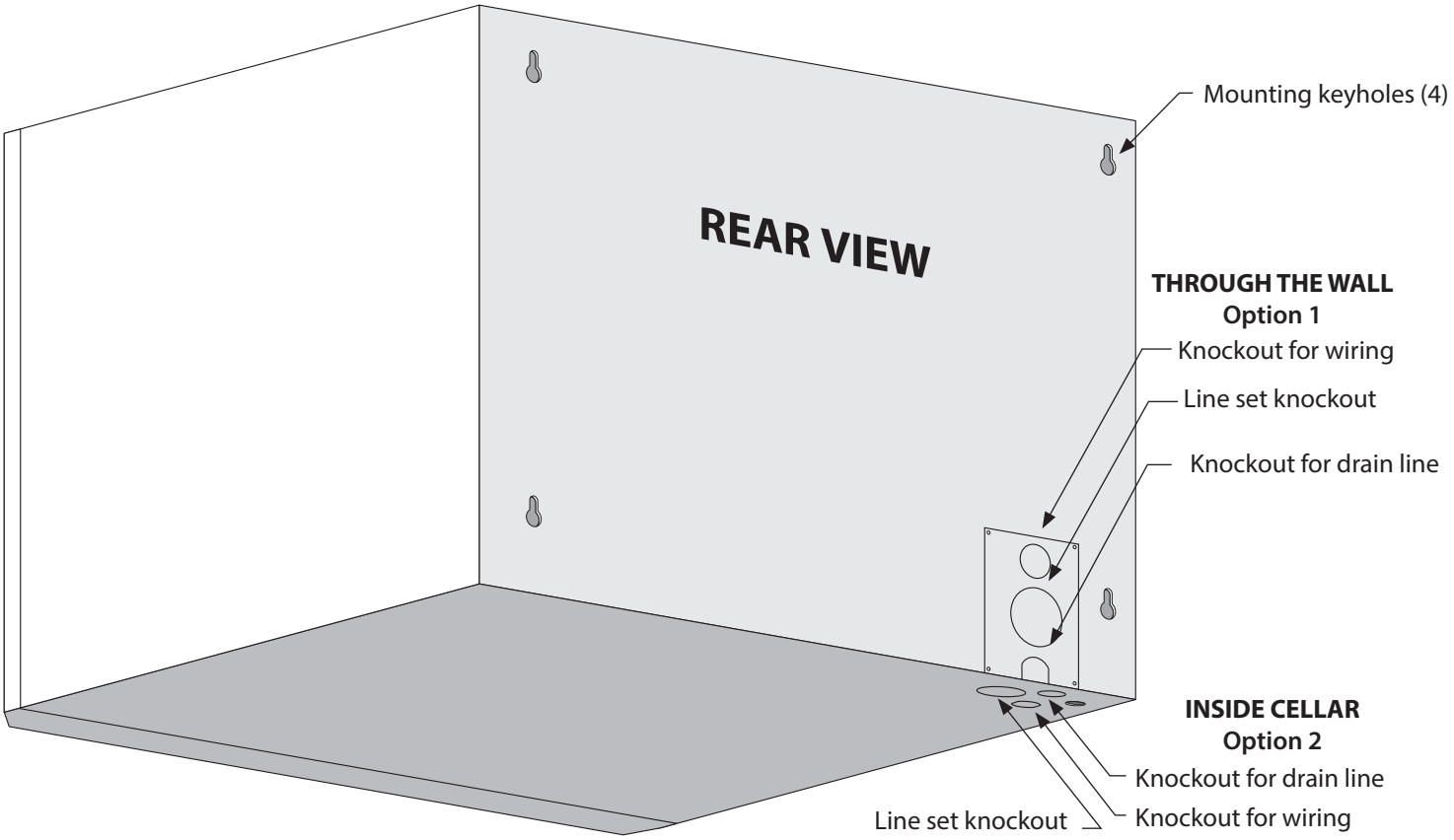

WALL-MOUNTED TWIN SPECIFICATIONS

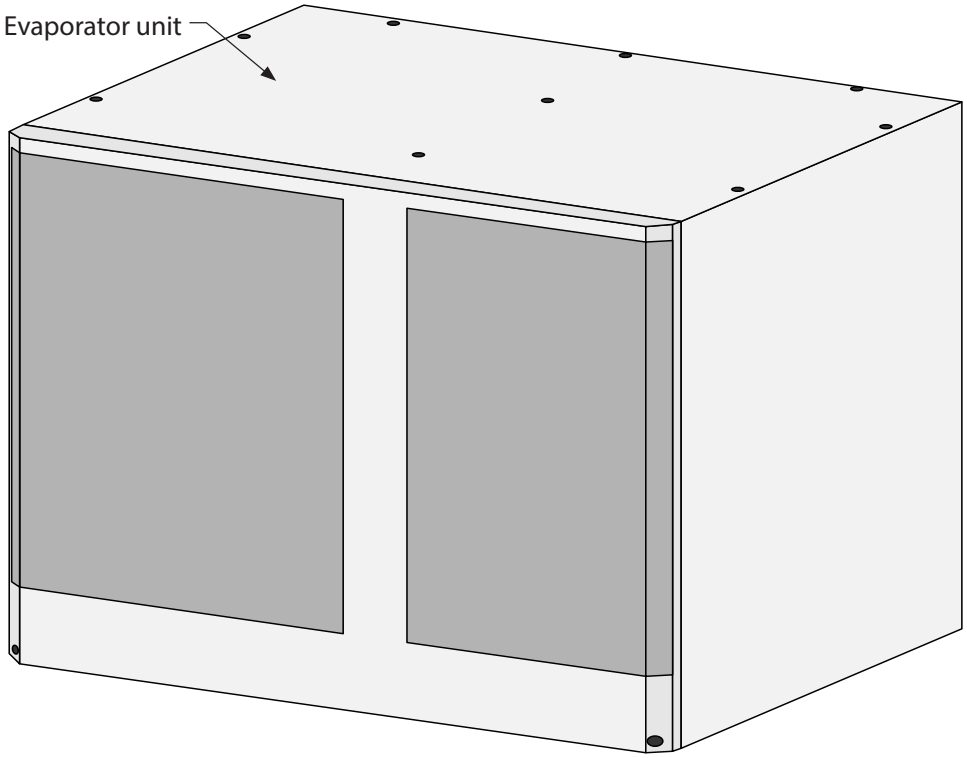

Model	9000 Master Evaporator (Fan Coil Unit)	9000 Slave Evaporator (Fan Coil Unit)
Cellar Size	Approx. 3000 cu. ft., provided cellar is fully insulated and sealed with proper vapor barrier*	
BTU/h w/85°F air entering the condenser coil	7850	7850
Dimensions	16.1"L x 20.5"W x 15.5"H	16.1"L x 20.5"W x 15.5"H
Refrigerant	R-134a	R-134a
Voltage Rating	115V (15-amp dedicated circuit required)	115V (15-amp dedicated circuit required)
Weight (lbs)	60	60
Amps	Evaporator: 1 running amp (per unit) Compressor: LRA 35, RLA 6.5	Evaporator: 1 running amp (per unit) Compressor: LRA 35, RLA 6.5
Line Set	Liquid line ⅜"; suction line ¾" (less than 50 ft.), ⅞" (greater than 50 ft.)	
Drain Line	½" ID clear plastic tubing (not provided)	
Installation	Evaporator units are installed in the cellar.	
Thermostat	Aftermarket (24V thermostat not included)	
Temp. Delta	Can maintain a 55°F temperature differential with up to 110°F condenser air intake temperature	
Warranty	Two-year limited warranty (parts and labor)	

*Each cellar is unique and has specific cooling requirements. Heat load calculations should always be performed prior to selecting a cooling unit.

FULLY DUCTED TWIN SPECIFICATIONS

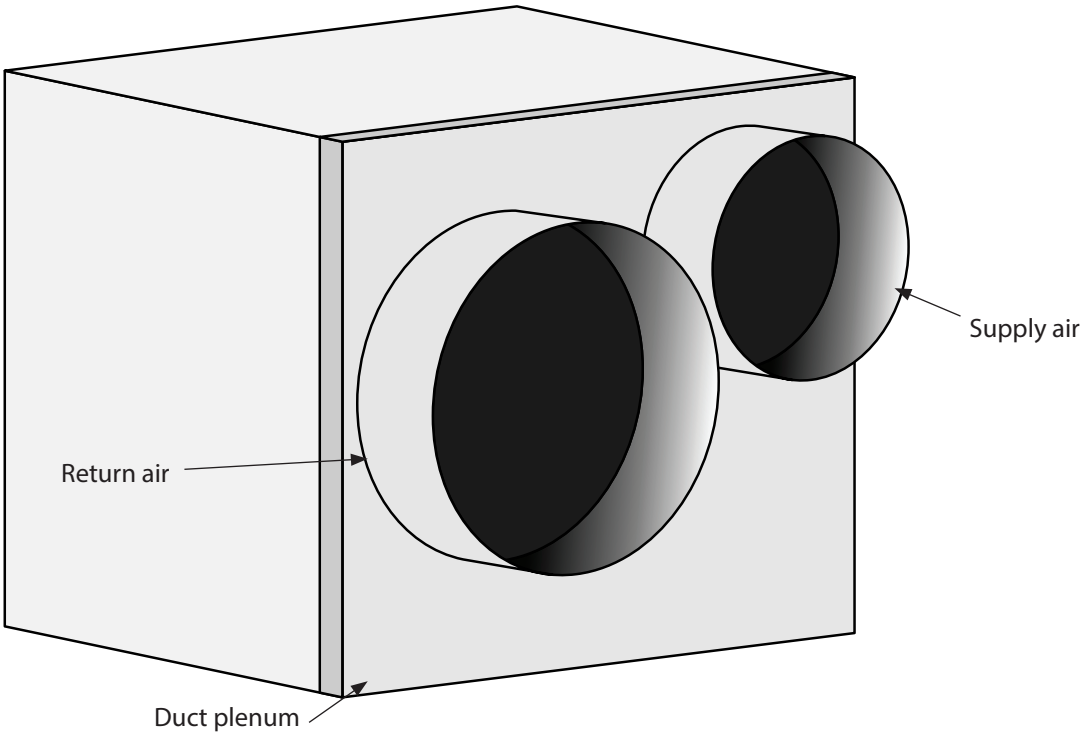

Model	9000 Master Evaporator (Fan Coil Unit)	9000 Slave Evaporator (Fan Coil Unit)
Cellar Size (cu. ft.)	Approx. 3000 cu. ft., provided cellar is fully insulated and sealed with proper vapor barrier*	
BTU/h w/85°F air entering condenser coil	7000	7000
Dimensions	20.1"L x 20.5"W x 15.5"H	20.1"L x 20.5"W x 15.5"H
Refrigerant	R-134a	R-134a
Voltage Rating	115V (15-amp dedicated circuit required)	115V (15-amp dedicated circuit required)
Weight (lbs)	60	60
Amps	Evaporator: 1 running amp (per unit) Compressor: LRA 35, RLA 6.5	Evaporator: 1 running amp (per unit) Compressor: LRA 35, RLA 6.5
Line Set	Liquid line ⅜"; suction line ¾" (less than 50 ft.), ⅞" (greater than 50 ft.)	
Duct Size	8" supply, 10" return (x2)	
Drain Line	½" ID clear plastic tubing (not included)	
Installation	Evaporator units can be installed up to 25 ducted feet away.	
Thermostat	Aftermarket (24V thermostat not included)	
Temp. Delta	Can maintain a 55°F cellar temperature with up to 110°F condenser air intake temperature	
Warranty	Two-year limited warranty (parts and labor)	

*Each cellar is unique and has specific cooling requirements. Heat load calculations should always be performed prior to selecting a cooling unit.

CONDENSING UNIT SPECIFICATIONS

Model	9000 Condenser (Air-Cooled Condensing Unit)
Dimensions	24”L x 18.98”W x 16.16”H
Refrigerant	R-134a
HP	3/4
Voltage Rating	230V (15-amp dedicated circuit required)
Weight (lbs)	95
Installation	Condensing unit can be installed up to 100 line feet from master evaporator unit.
Warranty	Two-year limited warranty (parts and labor)

PREPARING THE WINE CELLAR

The performance and life of your system is contingent upon the steps you take in preparing the wine cellar. Improperly preparing your enclosure or incorrectly installing your unit may cause unit failure, leaking of condensation, and other negative side effects.

IT IS HIGHLY RECOMMENDED THAT YOU OBTAIN THE ASSISTANCE OF A WINE STORAGE PROFESSIONAL.

Wine storage professionals work with licensed contractors, refrigeration technicians, and racking companies to build well-insulated, beautiful, and protective wine cellars. CellarCool has put together some useful tips to assist in the installation process. Our recommendations are meant to act as a guide in the process of building a proper enclosure. Your intended location may have specific needs which we do not address.

Wall and Ceiling Framing

Build wine cellar walls using standard 2x4 or 2x6 boards and ceiling joists without violating local or state codes in your area. As a general rule, the thicker the walls and the higher the insulation value, the more consistent your cellar temperature will be.

Insulation

Insulation is **REQUIRED** in order to properly use CellarCool products. It is vital that all walls and ceilings be insulated to keep the cellar temperature as consistent as possible during the summer and winter months. Standard fiberglass or rigid foam insulation is normally used in cellar construction; in some cases, "blown-in" insulation is used. The R-value, or quality of insulation, is determined by the rate at which heat passes through the insulation. The higher the R-value, the more resistant the insulation is to conducting heat, and the more consistent your wine cellar's temperature will be. Using higher R-values in insulation will lower your operating costs and CellarCool unit run time. (R-13 is the recommended minimum; R-19 is preferred for interior cellar walls, and R-30 for ceilings and exterior walls.)

Vapor Barrier

Water vapor creates its own pressure, separate from the ambient air pressure, and will intrude into colder/drier areas. A vapor barrier is **REQUIRED** in order to prevent the intrusion of water vapor and maintain the correct cellar temperature and humidity. It is recommended that 6-millimeter plastic sheeting be applied to the warm side of the cellar walls. The vapor barrier must also be applied to the outside walls and ceiling. If it is impossible to reach the outside, then the plastic must be applied from within the cellar. The most common method is to wrap the entire interior, leaving the plastic loose in the stud cavity so the insulation can be placed between each stud. All of the walls and ceiling must be wrapped in plastic for a complete vapor barrier.

In areas of high humidity, such as Southern and Gulf States, the vapor barrier will prevent infiltration of warm moist air. The moist air can cause mold to form, and standing water in drain pans promote microbial and fungal growth that cause unpleasant odors and indoor air quality problems. If mold is found, remove it immediately and sanitize that portion of the unit.

NOTE: High humidity significantly increases the heat load on the cooling system.

Any break in the vapor barriers (cut, nail hole, over-lapping, etc.) will cause a moisture leak and must be sealed. The electric conduit is a "duct" for vapor to travel in. The conduit should be caulked and sealed on the warm air end.

Mounting the Evaporator Units

The evaporator units must be mounted within 18" of the top of the room in order to achieve sufficient cooling. As the room cools down, the warm air will rise to the ceiling. Mounting the units high in the room will create a consistently cool environment by capturing the warm air and replacing it with cool air. Mounting the units low in the room will result in a temperature variation in the room due to the units' inability to draw warm air from the ceiling of the cellar to the units themselves, and cold air settling to the floor.

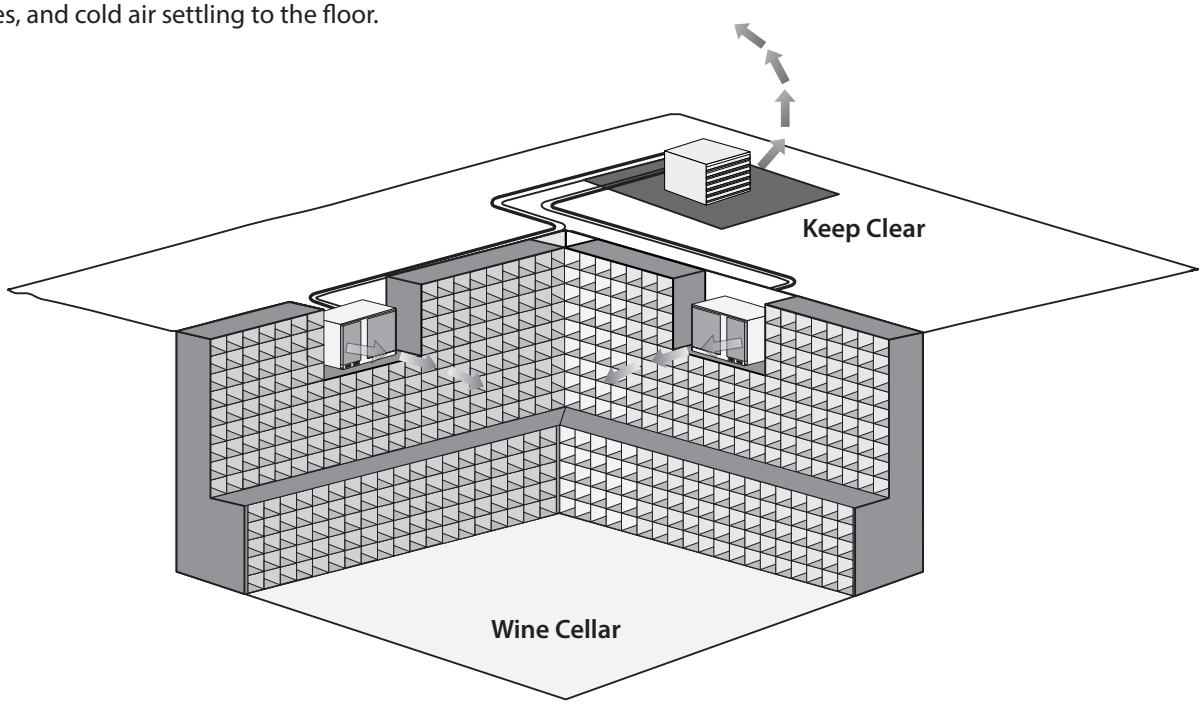

Unobstructed Airflow

Unobstructed airflow to and from the system is critical for the system's overall performance and lifespan. Make sure there is a minimum of three (3) feet of horizontal clearance in every direction around the units (five feet is ideal). The air blown by the fans needs to circulate and either dissipate or absorb heat from the space. The system will operate more efficiently with a greater amount of air to exchange.

NOTE: Avoid attempting to camouflage the units. This will restrict airflow and thus the system's ability to work efficiently.

NOTE: For ducted systems, every 90° bend in the ducting causes the system to lose 13 CFM of airflow.

Door and Door Seal

An exterior grade (1¾") door must be installed as a cellar door. It is essential that weather stripping is attached to all 4 sides of the doorjamb. A bottom "sweep" or threshold is also required. The door must have a very good vapor seal to prevent warmer moist air from leaking into the cellar. One of the most common problems with cooling systems running continually is due to the door not sealing properly. **In cases where glass doors are used and the room size is close to the recommended system size, the next larger size CellarCool system should be used.** This will compensate for the insulation loss due to the lower insulating rating of glass.

Ventilation

The necessity of dissipating heat away from the condensing unit is critical to the unit's performance and cannot be overstated. As the system operates and cools, a greater amount of heat is generated on the condensing side of the system. Adequate ventilation is required in order to dissipate heat away from the condensing unit. If ventilation is inadequate, the exhaust will heat up the area or room and adversely affect the systems ability to cool. In some cases, it may be advisable to install a vent fan to dissipate heat within the exhaust area on the condensing side of the system. However, you must have a fresh air inlet as well.

Note: If you are unsure about having adequate ventilation in your install location, please contact us to assess your specific installation at support@cellarcool.com or 1-800-343-9463.

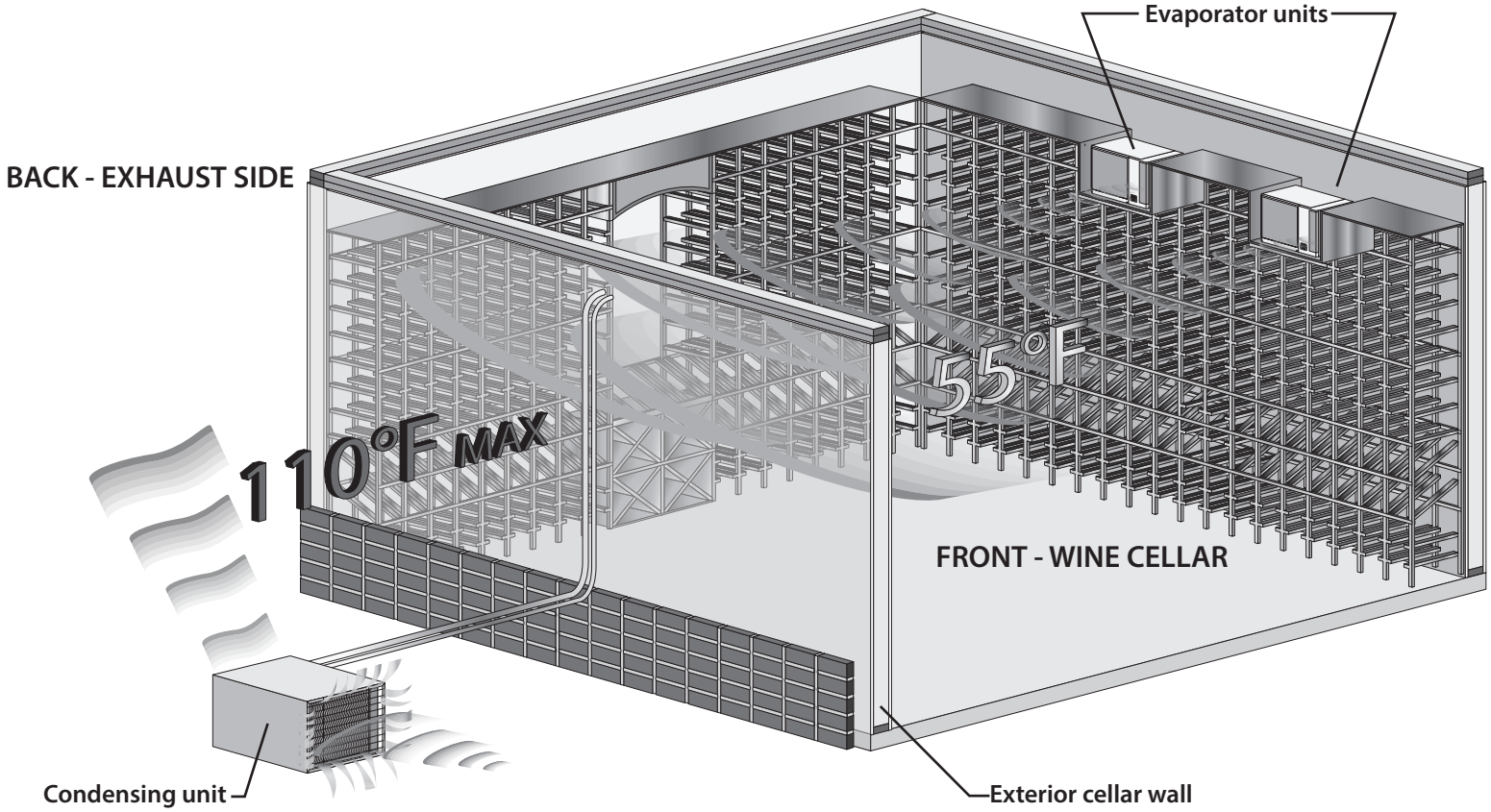

Ambient Temperature Factor

The cooling system has the ability to cool a wine cellar efficiently to 55°F as long as the ambient temperature of the area that it is exhausting to does not exceed 110°F. Therefore, you want to exhaust the condensing unit in a space which will not exceed 110°F. Otherwise the system will not have the capacity to keep the wine at a desirable 55°F.

WARNING! Allowing your system to operate in high ambient temperatures for extended periods of time will greatly decrease the life of your system and void your warranty. The cooler the temperature of the air entering the condenser coil, the more cooling capacity the system has. The less heat gain through the common wall, the less the electricity consumption.

SYSTEM OPERATION

The cooling system is equipped with the hardware needed to support a 24-volt air conditioning thermostat (not included).

Initial Start-Up

Set the thermostat to COOL and fan switch to AUTO. Lower the setpoint to the desired cellar temperature. (A temperature of 55°F is the recommended setpoint.) See thermostat instructions for details.

Normal System Cycle

The thermostat should turn the cooling system on when it senses a temperature one (1) degree higher than the setpoint. See thermostat instructions for details.

Anti-Short Cycle

Most thermostats have a safety feature that will prevent the condensing unit from cycling on and off within a short period of time. During the anti-short cycle, the condensing unit will typically remain off for 5-7 minutes. See thermostat instructions for details.

Fan Operation

If the fan switch on the thermostat is in the AUTO position, it will run only during the cooling cycle. If the fan switch on the thermostat is in the ON position, the fan will continuously run until the switch is set back to the AUTO position.

Operation in Low Ambient Temperatures

The condensing unit comes equipped with a LAC (Low Ambient Control). The LAC is a three-way modulating valve that responds to discharge pressure. When the discharge pressure falls below the valve's dome pressure, the valve modulates open to the discharge port which allows discharge gas to bypass the condenser. Mixing the discharge gas with the liquid creates high pressure at the condenser outlet, reducing the flow and causing liquid to backup in the condenser. Flooding the condenser reduces the area available for condensing. This reduction in condenser surface area results in a rise in condensing pressure during cold ambient conditions.

The condensing unit controller is preset at the factory. The cut-in pressure is preset to 25psi and the cut-out pressure at 15psi. During low ambient temperatures (40°F or below), it will be necessary to adjust the cut-in pressure to 10-15psi (15psi is preferred) and the cut-out to 5psi to ensure compressor startup. See page 14 for instructions on adjusting the cut-in and cut-out pressures of the condensing unit.

NOTE: To ensure correct system operation, the 24V thermostat must be placed inside the wine cellar, preferably in a central location away from any airflow.

Emerson™ Electronic Unit Controller

Quick setup and troubleshooting guide

Adjusting Low Pressure Settings

Hold DOWN and SET simultaneously for 3 seconds to enter menu (PSI light will flash)	▽ + SET
Cycle through menu options – UP/DOWN	△ ▽
Select function – SET	SET
Adjust value – UP/DOWN	△ ▽
Store function - SET	SET
Exit menu - UP and SET	△ + SET

Low Pressure Cut-In

Low Pressure Cut-Out

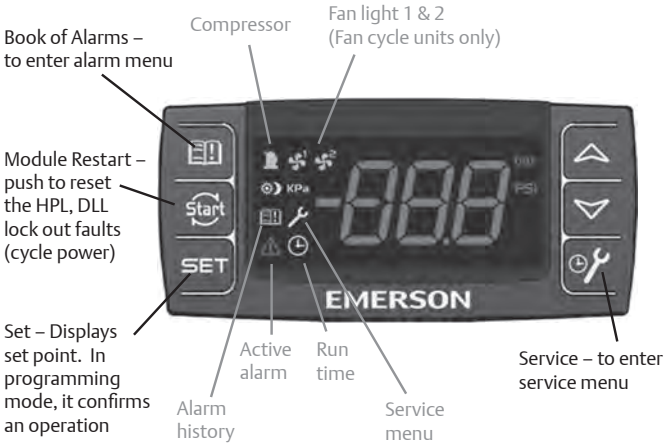

When light is on, feature or component is on or active

Accessing Alarm Code Information

Press and release ALARM	
Cycle through menu options – UP/DOWN	△ ▽
Press SET to see number of alarms	SET
Press SET again to return to menu options	SET
Exit menu - UP and SET	△ + SET

Alarm	Description
PoF	Keypad locked
Pon	Keypad unlocked
P1	Suction probe failure
P2	Condenser probe failure
P3	DLT probe failure
HA	High condenser temperature alarm
dLt	DLT temperature alarm
dLL	DLT lock alarm
HP	High pressure trip alarm
HPL	High pressure trip lock-out alarm
EE	Module Failure
LOC	Number of lock-outs

Note: After 15 seconds of inactivity the controller will revert to the default display.

Accessing Service Menu

Hold SERVICE for 3 seconds	
Cycle through menu options – UP/DOWN	△ ▽
Press SET to see number of alarms	SET
Press SET again to return to menu options	SET
Exit menu - UP and SET	△ + SET

Code	Description
StH	CompressorStarts –1000 -999999
StL	Compressor Starts –0 -999
CHH	CompressorHours -1000 -999999
CHL	Compressor Hours -0 -999
F1H	Fan 1 Hours -1000 -999999
F1L	Fan 1 Hours-0 -999
F2H	Fan 2 Hours -1000 -999999
F2L	Fand 2 Hours -0 -999
Example: If StH=12 and StL=500, the total number of compressor starts=12,500	

For more information visit
EmersonClimate.com/ElectronicUnitController
or call 1-888-367-9950

EMERSON
Climate Technologies

Display	Likely Causes	Other Possible Causes
Controller display remains blank after applying power	• Unit power not properly applied - check for proper applied voltage • Power cable harness not plugged in properly or securely into the back of the controller – check connections	• Power cable miswired – inspect cable, replace if needed • Electrical assembly miswired – trace wiring diagrams
Controller displays correctly, but the green compressor light is off and the compressor is not running	• Jumper cable not plugged in properly or securely into the back of the controller – check connections • Controller is currently above the cut-in setting – check cut-in and cut-out settings	• Jumper cable miswired – inspect cable, replace if needed
Controller displays correctly and the green compressor light is on and the compressor is not running	• Power cable harness not plugged in properly or securely into the back of the controller – check connections	• Power cable not wired to the contactor or compressor correctly, check wiring • Power cable miswired – inspect cable, replace if needed
Controller flashes “135” or “P1”	• Current system pressure is above 135 PSIG – wait for system to pull down • Green harness not plugged in properly or securely into the back of the controller – check connections • Cable not connected properly with the pressure transducer – check connections	• Transducer cable miswired – inspect cable, replace if needed • Damaged transducer – inspect transducer, replace if needed
Controller flashes “P2” on a unit with fan cycling	• Green harness not plugged in properly or securely into the back of the controller – check connections	• Transducer cable miswired – inspect cable, replace if needed • Check condenser temperature sensor resistance values against table in AE-1376, Section 8
Controller flashes “P2” on a unit without fan cycling after replacing a controller	• Controller not programmed properly – check parameters in the advanced menu	
Controller flashes “P3” on a unit with DLT	• Jumper cable not plugged in properly or securely into the back of the controller – check connections	• Jumper cable miswired – inspect cable, replace if needed • Faulty DLT temperature sensor – check the discharge line temperature sensor resistance values against table in AE-1376, Section 8
Controller flashes “P3” on a unit without DLT after replacing a controller	• Controller not programmed properly – check parameters in the advanced menu	
Fans not running on a fan cycling unit and the fan lights are not on	• Condensing temperature is currently below the fan cut-in • Condensing temperature sensor not properly installed – check installation	• Transducer cable miswired – inspect cable, replace if needed • Faulty temperature sensor - check condenser temperature sensor resistance values against table in AE-1376, Section 8
Fans not running on a fan cycling unit and the fan lights are on	• Power cable harness not plugged in properly or securely into the back of the controller – check connections	• Power cable miswired – inspect cable, replace if needed • Electrical assembly miswired – trace wiring diagrams
Controller flashes “HP” at power-up	• Jumper cable not plugged in properly or securely into the back of the controller – check connections • High pressure switch is seeing above the cut-out pressure • For a replacing an -00 controller, ensure that the jumper cable is the latest revision. It should have a blue wire in the harness. See replacement instructions for more details	• Jumper cable miswired – inspect cable, replace if needed • Faulty fixed Hp switch – inspect switch, replace if needed
Controller flashes “HP” or “HPL”	• System operation causing high discharge pressures, check system operations	• Bad high pressure switch, verify system pressure when the pressure switch trips. • See AE-1376, Section 7.2 for more details
Controller flashes “DLT” or “DLL”	• System operation causing high discharge line temperatures, check system operations	• Faulty temperature sensor - check DLT sensor values against table in section 8 • See AE-1376, Section 7.1 for more details
Controller flashing “HPL” or “DLL”	• System operation causing high discharge pressures (HPL) or high discharge line temperatures (DLL) repeatedly, check system operations • To clear an “HPL” or “DLL” lockout, you can hold the Restart button for 3 seconds twice, or cycle power to the unit. If using the reset button, the alarm condition will have to clear (DLT temperature drops or Hp switch resets), and any minimum off time will need to complete (5 minutes for the fixed Hp switch)	

EmersonClimate.com/ElectronicUnitController

2013ECT-46 (9/13) Emerson is a trademark of Emerson Electric Co. ©2013 Emerson Climate Technologies, Inc. All rights reserved.

EMERSON. CONSIDER IT SOLVED.™

CELLARCOOL TROUBLESHOOTING GUIDE

Ice forming on the evaporator units

Possible cause	Solution
Evaporator filters or coils are dirty	Remove the filters and wash them, then clean the coils with a vacuum. If coils are very dirty, use a spray bottle with a small amount of liquid dish detergent or coil cleaner. Spray coils, let set for five minutes, then flush with fresh water.
There is something blocking the supply and/or return air	Remove blockage
The evaporator fans are not turning on	Call customer service for details on how to perform the bypass plug test. If all components run correctly, and the system cools during the bypass plug test, there is either an issue with the 24V thermostat conversion kit or the thermostat. Contact customer service for further action.
If evaporator units continue to ice	Observe ice formation pattern. If only part way up the coil face, the system could be low on refrigerant. If all the way up, the coils may be dirty or airflow is blocked.
The setpoint is too low	Raise setpoint to recommended temperature of 55°F

System does not run/power up

Possible cause	Solution
Evaporator units are not plugged in	Make sure the units are plugged into an outlet
Power switch not on	Turn unit on by pressing the power button on the control
Line voltage rating is incorrect for the system	Check line voltage to make sure there is 110V-120V
Thermostat not calling for cooling	Adjust thermostat to a lower temperature
Faulty thermostat or wiring	Call Customer Service at 1-800-343-9463

Cellar temperature is too warm

Possible cause	Solution
The temperature of the room to which the condensing unit exhausts exceeds 110°F	Intake temperature needs to drop below 110°F
The system is undersized for the cellar	Order correctly sized system
There is something blocking the supply and/or return air on the evaporator units or the condensing unit	Remove airflow obstruction(s)
Evaporator units are mounted too low in the cellar	Relocate units so the distance from the ceiling and top of the units is no more than 18”
One or more of the fans is not turning on	Please contact the installing technician to troubleshoot
Compressor is not turning on	Please contact the installing technician to troubleshoot
Compressor keeps cycling on overload	Make sure all fans are working and there is no airflow obstruction
Poor seal around door or other areas requiring a seal (around the unit, wall joints, etc.)	Make sure there are no air gaps around the door. If door seal is damaged, replace it.
Thermostat set too high	Adjust thermostat to a lower temperature
Evaporator coils are frosted or iced up	Observe ice formation pattern. If only part way up the coil face, evaporator units could be low on refrigerant. If so, contact your installing technician to assist with troubleshooting.

System runs constantly

Possible cause	Solution
Leaky door seal or poorly insulated cellar	Fix leaky door seal and insulate cellar

Units leak water	
Possible cause	**Solution**
Evaporator units are not level	Evaporator units should be level on the wall to prevent leaking
Drain lines clogged or kinked	Check drain lines to make sure water can flow freely
Drains are clogged, preventing water from escaping	Disconnect drains and clear them out; check drains for blockage
Drain lines do not have a downward slope	Fix drain lines so there is a downward slope from the units to the drains
Coils are iced, causing drain pans to freeze and water to overflow	Melt ice with blow drier. Soak up with a towel.
System runs but does not cool	
Possible cause	**Solution**
Lack of air flow	Make sure fans are unobstructed and that the evaporator filters, evaporator coils, and condenser coils are clean and free of debris
System undersized	Contact Customer Service at 1-800-343-9463
Compressor is overheating	Shut system off for 1 hour to allow compressor to cool. Turn back on and check for cooler air flow out. If compressor runs, check for and clean condenser coil as possible cause of compressor overheating. If problem repeats, contact you installing technician to assist with troubleshooting.
Evaporator fan runs but compressor does not	
Possible cause	**Solution**
Compressor and/or starting components faulty	Please contact the installing technician to troubleshoot
Compressor may have overheated	Shut system off for 1 hour to allow compressor to cool. Turn back on and check for cooler air flow out. If compressor runs, check for and clean condenser coil as possible cause of compressor overheating. If problem repeats, contact your installing technician to assist with troubleshooting.
Thermostat not sending power to Y terminal	Call customer service for details on how to perform bypass plug test
24V thermostat conversion kit solenoid relay not working correctly	Call customer service for details on how to perform bypass plug test
Compressor runs but evaporator fan does not	
Possible cause	**Solution**
Faulty fan motor	Please contact the installing technician to troubleshoot
Faulty thermostat	Please contact the installing technician to troubleshoot
Compressor short cycles	
Possible cause	**Solution**
Master evaporator unit's thermostat location	Move thermostat out of airflow
System low on refrigerant charge	Please contact the installing technician to troubleshoot
Condensing fan motor/capacitor faulty	Please contact the installing technician to troubleshoot
Compressor and /or starting components faulty	Please contact the installing technician to troubleshoot
Humidity in cellar too low	
Possible cause	**Solution**
Not enough moisture	Purchase and place a humidifier (or a decorative fountain) in cellar

Units equipped with the 24V Thermostat Conversion Kit:

System does not power up/run	
Possible cause	**Solution**
Batteries on thermostat have lost their charge	Change batteries
Thermostat wired incorrectly	Check wiring on 24V thermostat and correct
Wiring issue at master evaporator unit	Contact Customer Service for troubleshooting
24V transformer in master evaporator unit has failed	Contact Customer Service for troubleshooting
Evaporator fans run continuously	
Possible cause	**Solution**
Fan switch on thermostat set to "on"	Set fan switch to the "auto" position
Fan relay in thermostat or 24V conversion kit stuck on	Call Customer Service for details on how to perform the bypass plug test

MAINTENANCE SCHEDULE

Monthly	1. Check coils 2. Check for unusual noise or vibration 3. Check the drain lines to see if they are above the waterline (if draining into a vessel)
Quarterly	1. Use a vacuum with brush attachment to clean coils; be careful not to crush coil fins when cleaning 2. Change duct filters if the system is ducted
Annually	1. Inspect for corrosion 2. Check wiring connections and integrity of cords 3. Pour a 50/50 bleach solution into the drain lines every spring

TECHNICAL ASSISTANCE

CellarCool Customer Service is available Monday through Friday from 6:00 a.m. to 4:00 p.m. Pacific Standard Time.

The appointed customer service representative will be able to assist you with your questions and warranty information more effectively if you provide them with the following:

- The model and serial number of your CellarCool system(s).
- Location of unit and installation details, such as ventilation, ducting, construction of your wine cellar, and room size.
- Photos of the cellar and installation location may be needed.

Contact CellarCool Customer Service

1738 E. Alpine Ave
Stockton, CA, 95205
www.cellarcool.com

Email: support@cellarcool.com
Tech Support & Customer Service: 1-800-343-9463
Sales & Sizing Assistance: 1-855-235-5271
Fax: 209-466-4606

Visit www.emersonclimate.com/electronicunitcontroller for online brochures, bulletins, instruction videos, and general product information.

Download the Copeland Mobile App on your mobile device for additional troubleshooting and technical information.

ACCESSORIES FOR COOLING UNITS

CellarCool offers accessories to enhance and customize your wine cooling unit:

Condensate Pump Kit

The condensate pump kit automatically removes water that drips out of each evaporator units' drain lines. The pump is controlled by a float/switch mechanism that turns the pump on when approximately 2¼" of water collects in the tank, and automatically switches off when the tank drains to approximately 1¼". The condensate pump kit allows the excess condensate to be pumped up to 20 feet away from the unit.

Exterior Housing

If the cooling unit is installed outside, it will need protection from sun, wind, and rain. The exterior housing protects the condensing unit portion of the split system from the elements when installed outdoors.

Accessories can be purchased at www.cellarcool.com

CellarCool Product Terms and Conditions
Including Product Limited Warranty And Product Installation Requirements
For CellarCool Split System Series

ATTENTION: PLEASE READ THESE TERMS OF USE CAREFULLY BEFORE INSTALLING YOUR CELLARCOOL COOLING SYSTEM. INSTALLING YOUR CELLARCOOL COOLING SYSTEM INDICATES THAT YOU ACCEPT AND AGREE TO EACH OF THE TERMS AND CONDITIONS SET FORTH HEREIN ("TERMS OF USE"). IF YOU DO NOT ACCEPT THESE TERMS OF USE, YOU RISK VOIDING YOUR WARRANTY AND ASSUMING ADDITIONAL REPAIR AND REPLACEMENT COSTS.

1. Purchase of a CellarCool Cooling System assumes that the Purchaser ("End User") fully accepts and agrees to the Terms and Conditions set forth in this document. The Terms and Conditions of Sale and Owner's Manual are shipped with each unit and, if another copy is needed, replacement copies can be downloaded from the company website (cellarcool.com) or by contacting CellarCool directly for a new copy. CellarCool reserves the right, in its sole discretion, to change its Terms and Conditions at any time, for any reason, without notice.

2. CellarCool Product Installation and Limited Warranty

A. Purchaser of the product must arrange for the product to be installed by a certified HVAC/R technician in accordance with procedures set forth by CellarCool and described in the CellarCool Owner's Manual.

B. The HVAC/R technician installing the product must complete the designated portion of the Split Startup Checklist and provide licensing or certification identification number information to assist in the warranty registration process.

C. Purchaser must return the completed Split Startup Checklist to CellarCool within thirty (30) days of installation of Product. The Split Startup Checklist must be approved by CellarCool to activate the Limited Warranty. If the Split Startup Checklist is approved, Purchaser will be sent activation approval documents and will start receiving the benefits of the Limited Warranty throughout the warranty period. If the Split Startup Checklist is incomplete, Purchaser will be informed they have five days to complete the Split Startup Checklist and re-submit to CellarCool. The Split Startup Checklist will be reviewed again, and if denied, Purchaser will be informed that they have 10 business days for corrective action. Failure to register the Product may result in loss of warranty.

D. Purchaser is responsible for the full costs of installation and any additional parts required for the proper and complete installation of the product.

E. For Split Systems returned to CellarCool in accordance with the terms and conditions of the Limited Warranty, CellarCool warrants against defects in material and workmanship as follows:

1. LABOR - For a period of two (2) years commencing on the date of purchase, CellarCool will, at its option and discretion, reimburse up to $250 to the End User for cost incurred for servicing, repairing, removing or installing warranty parts. Invoice for service must be forwarded to CellarCool for assessment and processing. The Split System warranty is invalid if there is attempted repair by anyone other than an HVAC/R technician approved by CellarCool to service the Product.

2. PARTS - For a period of two (2) years commencing on the date of purchase, CellarCool will supply, at no charge, new or rebuilt replacement parts in exchange for defective parts. Replacement parts are warranted only for the remainder of the original warranty period.

3. FREIGHT - For a period of two (2) years commencing on the date of purchase, if after CellarCool approved evaluation the original Product failure is determined to be the cause of a manufacturers defect, and not the cause of an installation error or other cause, CellarCool will cover at its option, freight for the replacement parts or Product.

The following part or cause of failure is not the responsibility of CellarCool:

- Improper voltage supply
- Line set with screw connectors (high end and low end)
- Leaks found at the braze points when performing pressure check
- Unit that has been charged incorrectly
- Incorrect tubing diameter used on line set
- A unit that has been wired incorrectly
- Valve stem on condenser side
- Improper installation of P-Trap
- Lack of P-Trap (if required)
- Condensers that are installed outdoors or in elements that would affect operation without proper cover or housing. (Housing is available from Manufacturer).

Product Warranty Limitations and Exclusions.

1. This limited warranty does not cover cosmetic damage caused during installation, damage due to acts of God, commercial use, accident, misuse, abuse, negligence, or modification to any part of the Product. Delivery and installation of the Product, any additional parts required, as well as removal of the Product if warranty work is required, are all at the sole cost, risk and obligation of the End User.
2. This limited warranty does not cover damage due to improper installation or operation or lack of proper maintenance of the Product, connection of the Product to improper voltage supply, or attempted repair of the Product by anyone other than a technician approved by CellarCool to service the Product.
3. This limited warranty does not cover any Product sold "AS IS" or "WITH ALL FAULTS."
4. Product that has been replaced during warranty period does not extend the warranty period past the original date of purchase.
5. This limited warranty is valid only in the continental United States. Sales elsewhere are excluded from this warranty.
6. Proof of purchase of the Product in the form of a bill of sale, receipted invoice or serial number, which is evidence that the Product is within the Limited Warranty Period, must be presented by the End User to CellarCool in order to obtain limited warranty service.
7. This limited warranty is void if the factory applied serial number has been altered or removed from the Product.
8. This limited warranty is voided if installed in an enclosure of insufficient design that does not follow the Product installation requirements stated herein and in the owner's manual.
9. Removing the rivets from the Product's unit housing without prior authorization from CellarCool voids this limited warranty.
10. The End User must first contact CellarCool Customer Service by telephone (at 1-800-343-9463) prior to attempting service on any Product still under the limited warranty; else the limited warranty is voided.
11. 11. This limited warranty does not cover Product being concealed by, but not limited to, vegetation, fabric, shelving, mud, snow, or dirt. Product must not be painted or limited warranty will be void.
12. This limited warranty does not cover exposure to corroding environments such as, but not limited to, petroleum and gasoline products, cleaning solvents, caustic pool chemicals, and marine air.
13. This limited warranty does not cover any cause not relating to Product defect.
14. THE REPAIR OR REPLACEMENT OF THE PRODUCT AS PROVIDED UNDER THIS LIMITED WARRANTY IS THE EXCLUSIVE REMEDY OF YOU, THE END USER, AS WELL AS ANYONE ELSE IN THE CHAIN OF TITLE OF THE PRODUCT, DOES NOT START A NEW LIMITED WARRANTY TIME PERIOD, AND IS IN LIEU OF ALL OTHER WARRANTIES (EXPRESS OR IMPLIED) WITH REGARD TO THE PRODUCT. IN NO EVENT SHALL CELLARCOOL BE LIABLE FOR INCIDENTAL, CONSEQUENTIAL, SPECIAL OR CONTINGENT DAMAGES FOR BREACH OF ANY EXPRESS OR IMPLIED WARRANTY ON THIS PRODUCT. THE IMPLIED WARRANTIES OF MERCHANTABILITY

AND FITNESS FOR A PARTICULAR PURPOSE ARE HEREBY EXPRESSLY DISCLAIMED. Some states do not allow the exclusion or limitation of incidental or consequential damages, or allow limitations on how long an implied warranty lasts, so the above limitations or exclusions may not apply to you. This limited warranty gives you specific legal rights, and you may have other rights, which vary from state to state.

15. Failure of the End User to comply with all of the Product Installation Requirements, Maintenance Requirements and End User Requirements may, at CellarCool's sole discretion, void this limited warranty.
16. No one has any authority to add to or vary the limited warranty on this Product.

3. Maintenance Requirements

The End User is responsible for checking the coils on the condenser unit and vacuuming them every three months to maintain them free of debris. It is the End User's responsibility to clean off any accumulated dust, lint, or other debris from the front and rear intake grills; failure to do this on a regular basis will restrict the airflow and may affect the Product's ability to function properly. Periodically cleaning the Product's vents will help assure maximum cooling efficiency. The drain tube must also be checked and kept clean and free of debris and mold to maintain proper performance.

Mold is a natural living organism in the environment. It exists in the air in the form of microscopic spores that move in and out of buildings through doors, windows, vents, HVAC systems and anywhere else that air enters. Once it is discovered, mold must be addressed quickly and appropriately. Delayed or improper treatment of mold issues can result in costly and reoccurring repairs. If the End User suspects a mold problem, it is always best to hire a qualified and experienced mold remediation specialist.

4. Additional End User Costs And Responsibilities

Terms and conditions for replacing the Product that is being evaluated for limited warranty.

1. After evaluation by a certified HVAC/R technician and the Product is found to be irreparable in the field, contact CellarCool Customer Service to arrange for replacement under the warranty guidelines. When a claim for warranty is submitted for a condenser skid, the End User must purchase a new condenser skid from CellarCool at retail price. Upon installation of the new condenser skid by a certified HVAC/R Technician, the HVAC/R Technician must complete the Installation Checklist and End User must submit the Installation Checklist to CellarCool Customer Service for approval. The original condenser skid must be returned within 21 days to CellarCool for failure analysis. If the Installation Checklist is approved and the failure is evaluated as defective and not installation error or other reason, the End User will be refunded for the cost of the replacement skid.
2. If the Product failure is evaluated and it is determined that it is an installation error or other reason, all costs, including shipping will be the responsibility of the End User.

The following items are not covered under any warranty and are the sole responsibility of the End User:

A. End Users should satisfy themselves that the Product they are purchasing is suitable for their particular needs and requirements, and thus no responsibility will be placed with CellarCool for the End User's decisions in this regard.

B. End Users must assure that the product is installed by a certified HVAC/R technician. Failure to do so will result in Voiding the Limited Warranty.

C. It is the End User's responsibility to secure safe haven/storage for ANY AND ALL items that are being kept and stored in the End User's wine cellar, including any Product. CellarCool takes no responsibility for the safety and preservation of the aforementioned items in the event that the environment becomes unsuitable to maintain a proper storage environment.

D. End User is responsible for initial installation costs, including, but not limited to, labor costs and the cost of any additional parts necessary to complete the installation.

E. End User is responsible for all costs incurred for the installation and/or removal of the Product, or any part thereof, unless such cost has been agreed by CellarCool to be a warranty repair prior to the work being performed.

5. Sales and Use Tax

CellarCool only collects California sales tax for orders shipped within the State of California; CellarCool does not collect sales tax for orders shipped to other states. However, the Purchaser and the End User may be liable to the taxing authority in their state for sales tax and/or use tax on the Product. The Purchaser and the End User should each check with their state's taxing authority for sales and use tax regulations.

6. Customer Service and Troubleshooting

CellarCool's customer service department is available to answer any questions or inquiries for End Users regarding a CellarCool Product, as well as to assist in performing basic troubleshooting, Monday through Friday, from 6:30 a.m. to 4:00 p.m. PST, at telephone number 1-800-343-9463. CellarCool reserves the right to have a certified, CellarCool-approved, HVAC/R technician go on site and inspect the product if the initial trouble shooting warrants further investigation. CellarCool Corporation is located at 1738 East Alpine Avenue, Stockton, California 95205.

7. Request for Product Evaluation and Repair Under Warranty

SPLIT SYSTEM FIELD SERVICE WARRANTY POLICY: This Policy is to clarify what falls under Warranty Service and what becomes the responsibility of the Owner. CellarCool ("manufacturer") strives to provide our customers with a superior Product and we back our Product with a Two Year Limited Warranty. Please review the CellarCool Product Terms and Conditions including Product Limited Warranty and Product Installation Requirements to ensure you have a complete understanding of our Policy and coverage of your Split System.

ARBITRATION: Any disputes arising out of or in connection with the installation and warranty of the Split System shall be referred to and finally resolved by a CellarCool approved Independent Certified HVAC/R Technician. The evaluation of the Technician on all issues or matters of identifying the responsible party (CellarCool or Installing Technician) shall be determined in a written report. This report will be made available to all concerned parties. If discovered under warranty, CellarCool will assume the financial responsibility under their warranty guidelines. If the report finds the Owner's Installer as the responsible party, CellarCool will provide all documentation to the customer to substantiate the findings. This will include the Invoice from the Independent Certified HVAC/R Technician and the written report of the findings. The Owner will become responsible for payment directly to CellarCool for all charges incurred for repairs (labor, parts and shipping costs) on the Split System.

8. Miscellaneous Terms and Conditions

A. Return Policy. All return inquiries must be made within thirty (30) calendar days of the original purchase of a Product and are subject to a twenty five percent (25%) restocking fee. Shipping costs are not refundable and the Purchaser is responsible for all return shipping costs (including customs fees and duties, if applicable).

B. Security Interest. CellarCool retains a security interest in each Product until payment in full.

C. Construction and Severability. Every provision of these Terms and Conditions shall be construed, to the extent possible, so as to be valid and enforceable. If any provision of these Terms and Conditions is held by a court of competent jurisdiction to be invalid, illegal or otherwise unenforceable, such provision will, to the extent so held, be deemed severed from the contract of sale between Purchaser and CellarCool, and all of the other non-severed provisions will remain in full force and effect.

D. Governing Law/Choice of Forum. The laws of the State of California (without regard for conflicts of law) shall govern the construction and enforcement of the these Terms and Conditions of Sale (Sections 1 through 9 inclusive, including Product Limited Warranty And Product Installation Requirements), and further these Terms and Conditions of Sale shall be interpreted as through drafted jointly by CellarCool and Purchaser. Any dispute will be resolved by the courts in and for the County of San Joaquin, State of California, and all parties, CellarCool, Purchaser and End User, hereby irrevocably submit to the personal jurisdiction of such courts for that purpose. No waiver by CellarCool of any breach or default of the contract of sale (including these Terms and Conditions of Sale) concerning a Product will be deemed to be a waiver of any preceding or subsequent breach or default.

E. Correction of Errors and Inaccuracies. These Terms and Conditions may contain typographical errors or other errors or inaccuracies. CellarCool reserves the right to correct any errors, inaccuracies or omissions, and to change or update these Terms and Conditions, at any time without prior notice.

9. Questions, Additional Information And Technical Assistance

A. Questions. If you have any questions regarding these Terms and Conditions or wish to obtain additional information, contact us via phone at 1-800-343-9463 or please send a letter via U.S. Mail to:

Customer Service
CellarCool Corporation
1738 E Alpine Ave
Stockton, CA 95205

Email: support@cellarcool.com
Web: www.cellarcool.com

B. Technical Assistance. CellarCool Customer Service is available Monday through Friday from 6:30 a.m. to 4:00 p.m. PST. The Customer Service representative will be able to assist you with your questions and warranty information more effectively if you provide them with the following:

1. The model and serial number of your CellarCool UNIT.
2. The location of the system and installation details, such as ventilation, construction of your wine cellar, and room size.

Model _____ **Serial Number** _____

Installed by _____ **Date** _____

CellarCool

CellarCool
1738 E. Alpine Ave
Stockton, CA 95205
1(800) 343-9463
www.cellarcool.com

WALL-MOUNTED & FULLY DUCTED
9000 TWIN-S

TECHNICIAN'S MANUAL

24V Thermostat Conversion Kit Option

Tech Support: 1 (800) 343-9463, ext. 801
Hours: Monday through Friday, 7 AM - 4 PM

CELLARCOOL

Conforms to ANSI/UL Std 427

Certified to CAN/CSA Std C22.2 No. 120

We manufacture, test and certify 100% of our wine cooling units in the USA. By sourcing the best components and closely controlling our manufacturing processes, we can assure the highest-quality, lowest defect manufacturing rates in the industry.

Copyright © 2019. CellarCool. All rights reserved.

CellarCool copyrights this manual, the product design, and the design concepts, with all rights reserved. Your rights with regard to the hardware and manual are subject to the restrictions and limitations imposed by the copyright laws of the USA. Under copyright laws, this manual may not be copied, reproduced, translated, transmitted, or reduced to any printed or electronic medium or to any machine-readable form, for any purpose, in whole or in part, without the written consent of CellarCool.

Every effort has been made to ensure that the information in this manual is accurate. CellarCool is not responsible for printing or clerical errors.

CellarCool reserves the right to make corrections or improvements to the information provided and to the related hardware at any time, without notice.

Vinothèque and CellarCool are registered trademarks, and ECE is a trademark of CellarCool. All rights reserved.

Mention of third-party products is for informational purposes only and constitutes neither an endorsement nor a recommendation. CellarCool assumes no liability with regard to the performance or use of these products.

TABLE OF CONTENTS

Introduction 2

Quick Start Guide 3

Before You Start 4

Receiving & Inspecting the System 5

Quick Reference Guide

- Wall-Mounted Evaporator 6
- Fully Ducted Twin Evaporator 7
- Wall-Mounted Twin Specifications 8
- Fully Ducted Twin Specifications 9
- Condensing Unit Specifications 10

Evaporator Installation

- 24V Wiring Connections 12
- Preparing the Wall-Mounted Evaporator Units 13
- Installing the Wall-Mounted Evaporator Units 14
- Preparing the Fully Ducted Evaporator Units 16
- Installing the Fully Ducted Evaporator Units 17

Ducting Overview 18

Ducting Configurations 19

Drain Line 20

Wiring Diagrams

- WM/FD 9000 Twin-S with 24V Thermostat Conversion Kit 21
- WM/FD 9000 Twin-S Master Evaporator with 24V TCK 22
- WM/FD 9000 Twin-S Slave Evaporator with 24V TCK 23
- WM/FD 9000 Twin-S Condensing Unit 24
- Copeland Cold Weather Start Kit 25

Preparing the Condensing Unit 26

Installing the Condensing Unit 26

Line Set Piping Diagram 27

Installing the Ducted Plenum 30

System Operation 35

CellarCool Troubleshooting Guide 38

Maintenance Schedule 41

Bypass Test Procedure 43

Technical Assistance & Accessories 44

Installation Terms and Conditions 45

INTRODUCTION

Customer Service

Thank you for purchasing a CellarCool cooling system. We strive to provide the highest-quality products and the best possible customer service. If you have any questions about your system, please call us at 1-800-343-9463 or visit cellarcool.com.

Using the Manual

This owner's manual is intended to assist in the proper maintenance of the cooling system. In order to ensure the longevity of your cooling unit, the equipment should be installed as outlined in the technician's manual. It is also vital to establish a proper care and maintenance schedule. Please read and review this manual carefully and keep it for future reference.

What is the CellarCool Cooling System?

The CellarCool cooling system is a specialized refrigeration system designed for one purpose only: to maintain the optimal temperature and humidity levels conducive to the proper storage and aging of fine wines. This system produces minimal in-cellar noise and has the most lenient exhaust requirements. An exterior housing is required for outdoor condensing unit installations.

How Does the Cooling System Work?

Similar to the air conditioning systems used for homes, the evaporator unit and condensing units are installed in separate locations and are connected by a refrigerant line set. The evaporator portion is commonly installed in the wine cellar, with the condensing unit is located either outside or in a remote indoor location that is ventilated. An exterior housing is required for outdoor condensing unit installations.

Temperature Setting

The system is designed to maintain a cellar temperature of 55°F as long as the ambient temperature does not exceed 110°F.

WARRANTY REGISTRATION

In order to activate the warranty of your system, the verification and operational documentation must be completed by the certified refrigeration technician installing your system and submitted via mail, fax, or e-mail.

Mail to:
CellarCool
ATTN: Warranty Registration
1738 E. Alpine Avenue
Stockton, CA 95205-2505
USA

Fax to:
209-466-4606

Scan and email to:
warranty@cellarcool.com

QUICK START GUIDE*

Pump-down Cycle

WhisperKOOL's split systems operate on a pump-down cycle different from traditional air conditioners. As such, there is no wiring between the condensing unit and evaporator unit.

WhisperKOOL units utilize a solenoid valve on the liquid line and a low-pressure switch on the suction line. When the thermostat calls for cooling, the solenoid valve opens, permitting the flow of refrigerant. The low-pressure switch then signals the compressor to cycle on.

When the cellar reaches the desired temperature and the thermostat is satisfied, the solenoid will close, stopping the liquid refrigerant flow to the TXV valve. The compressor will continue to operate until most of the refrigerant on the low side boils off and is pumped through the compressor into the condenser coil and receiver. As the suction pressure falls below the pressure control setting, the low-pressure switch will signal the compressor to cycle off. Most of the refrigerant is now stored between the condensing unit and receiver.

WARNING: Do not utilize a ground fault interrupter, as it will prevent the unit from drawing the amperage necessary to start the unit.

TXV Adjustments

A. A TXV adjustment may be necessary based on ambient temperatures in the cellar and at the condensing unit.
B. Adjust the TXV until the superheat measured at the suction line service valve is 20-30°F.
C. Under normal operation, with the wine cellar at 55°F and the ambient temperature at 85°F, the low side pressure should be between 28-32 PSI and the high side should be between 160-180 PSI.

TXV

The TXV is preadjusted at the factory. If the superheat is not within 20-30° at the service valve, the TXV will need to be adjusted.

ADJUSTING THE TXV

Use a 5⁄32" hex key to remove the cap from the TXV superheat adjustment port. With the cap removed, insert the hex key into the superheat adjustment port. Increase superheat by turning the hex key clockwise. Decrease superheat by turning the hex key counterclockwise.

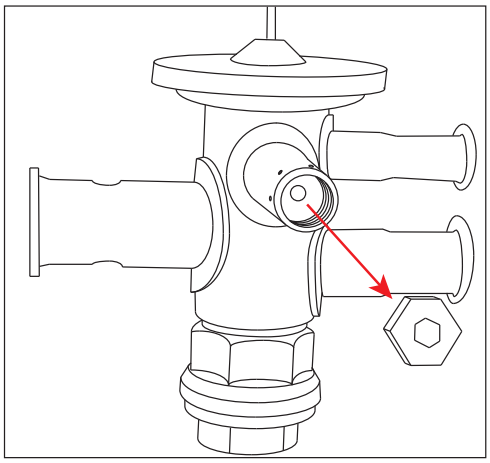

Liquid Line King Valve

This location is used to charge the system with liquid refrigerant and identify the high side pressure of the system.

Calculating Subcooling

To determine the subcooling of the system, calculate the difference between the **high side pressure of the system (converted to temperature)** and the **temperature of the liquid line**. The temperature of the liquid line will be taken at the outlet of the receiver.
*Saturation temp — liquid line temp

4-6°F SUBCOOLING REQUIRED FOR WARRANTY APPROVAL

***Further system operation information is available on page 35.**

BEFORE YOU START

1-800-343-9463

1. **Inspect all components prior to installation.** If damage is found, please contact your distributor or CellarCool Customer Service at 1-800-343-9463.
2. Each evaporator unit **requires a dedicated 115V, 15-amp circuit**. The condensing unit **requires a dedicated 230V single-phase 15-amp circuit**. Use a surge protector with the unit. **Do not use a GFI** (ground fault interrupter) line.
3. You are **REQUIRED** to **install a drain line** to remove condensation from each evaporator unit.
4. ***The warranty is not active until a warranty checklist has been received, reviewed, and approved.***
5. The system is intended **for use in properly designed and constructed wine cellars.** Hire a professional wine storage consultant with a valid contractor's license to build your wine cellar.
6. CellarCool requires that all split systems be installed by a certified HVAC-R technician only. NATE or equivalent is recommended.
7. ***It is vital that the units be set apart and oriented so that the return air from one unit does not recirculate into the supply air of the other unit.***

If you encounter a problem with your CellarCool system, please refer to the Troubleshooting Guide. If you have any further questions or concerns, or need technical assistance, please contact CellarCool's Customer Service at 1-800-343-9463. Please be sure all testing has been completed prior to contacting Customer Service. Please have your results ready for your representative.

RECEIVING & INSPECTING THE SYSTEM

- Use caution when lifting and check package for damage.
- Lift only at the designated hand-hold locations on the shipping container, or fully support the unit from underneath. A shipment may include one or more boxes containing accessories.
- Before opening the container, inspect the packaging for any obvious signs of damage or mishandling.
- Write any discrepancy or visual damage on the bill of lading before signing.
- Allow the condensing unit to sit for 24 hours prior to start-up. The condensing unit can be placed in the installation location, piped, and evacuated during this time.

NOTE: CellarCool units are manufactured in the USA and tested prior to shipment.

- Review the packing slip to verify contents.
- Check the model number to ensure it is correct.
- Check that all factory options ordered are listed.

If any items listed on the packing slip do not match your order information, contact CellarCool Customer Service immediately.

Check all shipped boxes for the following contents:

Master Evaporator Box

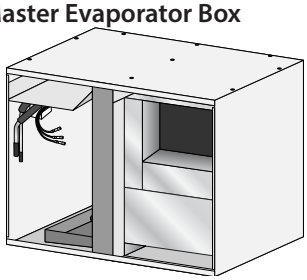

- (1) Master WM/FD Twin evaporator unit
- (1) Wall-mounted evaporator installation template

Documentation bag (master):

- WM/FD 9000 Twin-S owner's manual
- WM/FD 9000 Twin-S technician's manual
- R-134a split system warranty checklist

Evaporator installation hardware bag (master)

- (2) ½" x ½" 90° nylon barbed fitting
- (1) ½" barbed tee
- (1) Double-D strain relief
- (4) ¾" adhesive cable tie mounts
- (2) Small cable ties
- (4) #8 x 1¾" hex-head screws

Slave Evaporator Box

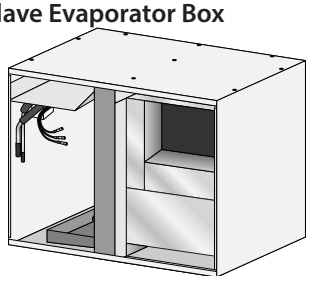

- (1) Slave WM/FD Twin evaporator unit
- (1) Wall-mounted evaporator installation template
- (1) Evaporator installation hardware bag

- (2) ½" x ½" 90° nylon barbed fitting
- (1) ½" barbed tee
- (1) Double-D strain relief
- (4) ¾" adhesive cable tie mounts
- (2) Small cable ties
- (4) #8 x 1¾" hex-head screws

Condensing Unit Box

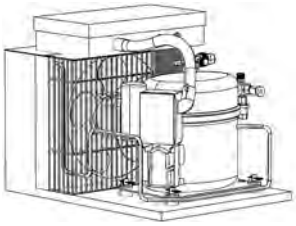

- (1) Condensing unit
- (1) Condensing unit accessory kit:
  - (1) ¼" filter drier
  - (1) ¼" sight glass

Ducted Master Accessory Kit Box

(1) Duct plenum

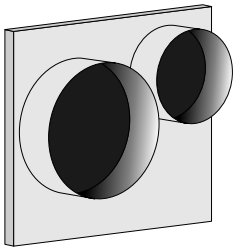

OR

Wall-Mounted Master Accessory Kit Box

(1) Filter grille

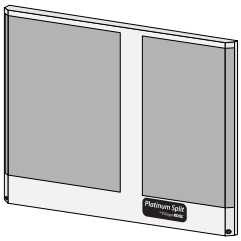

Ducted Slave Accessory Kit Box

(1) Duct plenum

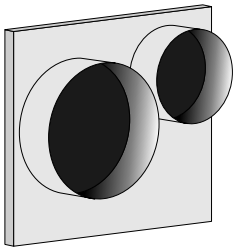

OR

Wall-Mounted Slave Accessory Kit Box

(1) Filter grille

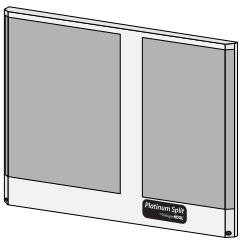

Please leave the unit in its original box until you are ready for installation. This will allow you to move the product safely without damaging it. When you are ready to remove the product from the box, refer to the installation instructions.

TIP: Save your box and all packaging materials. They provide the only safe means of transporting/shipping the unit.

QUICK REFERENCE GUIDE

Wall-Mounted — Front / Side View

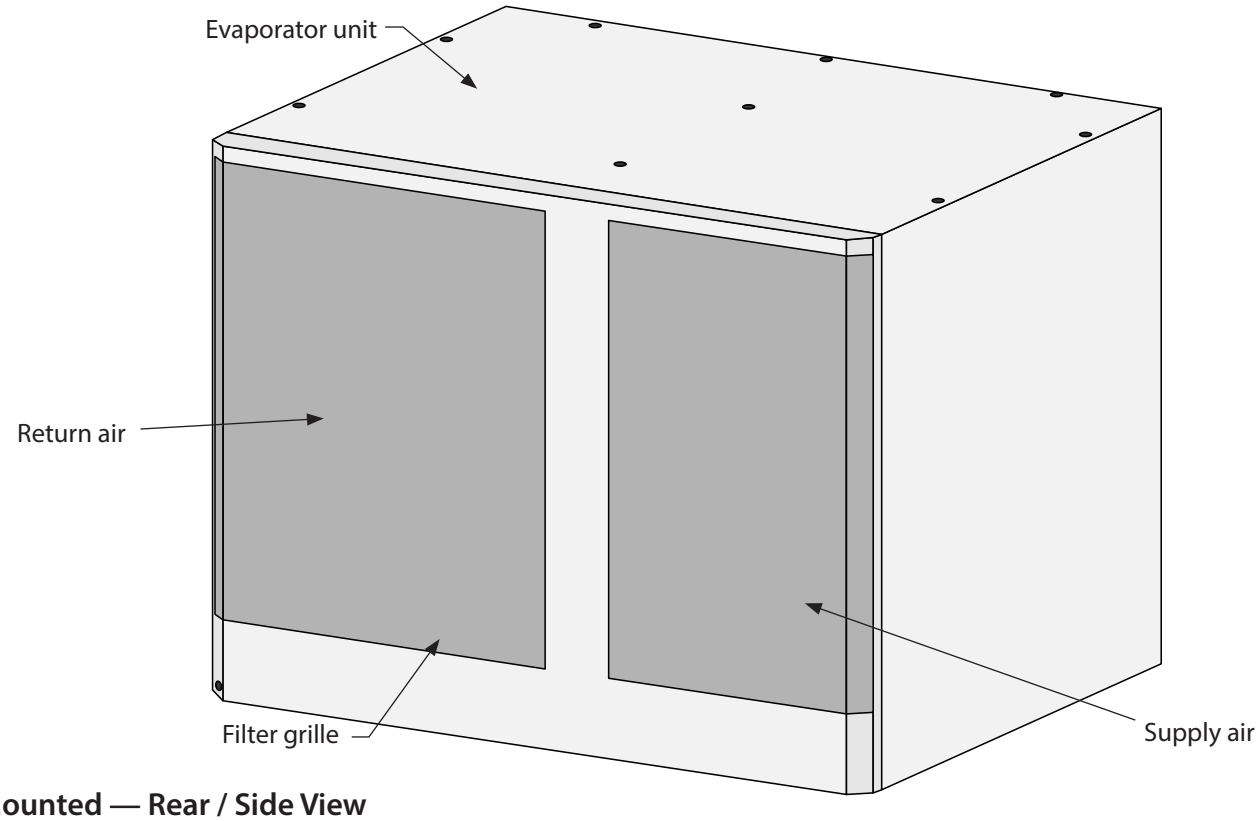

Wall-Mounted — Rear / Side View

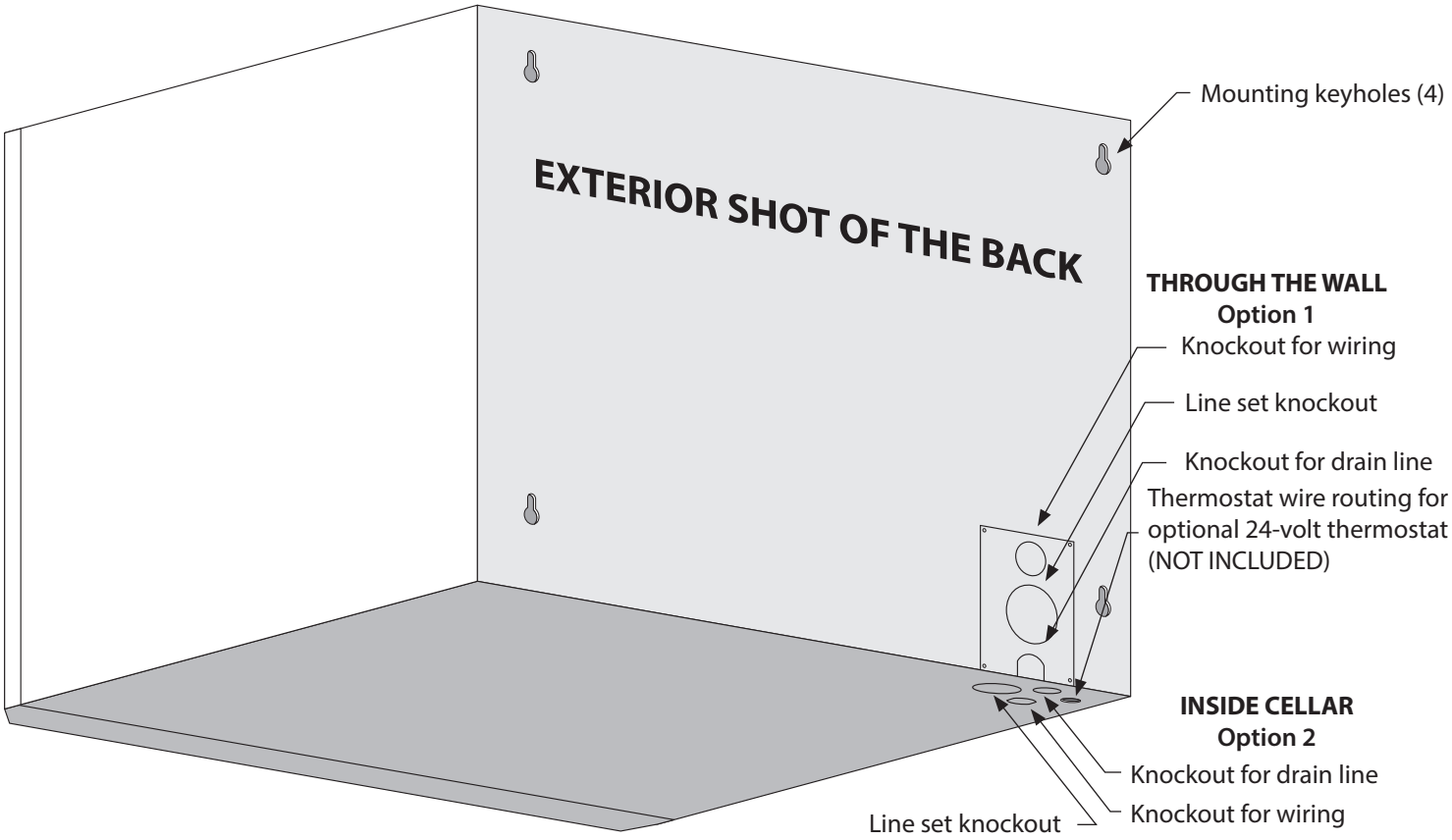

Fully Ducted — Front / Side View

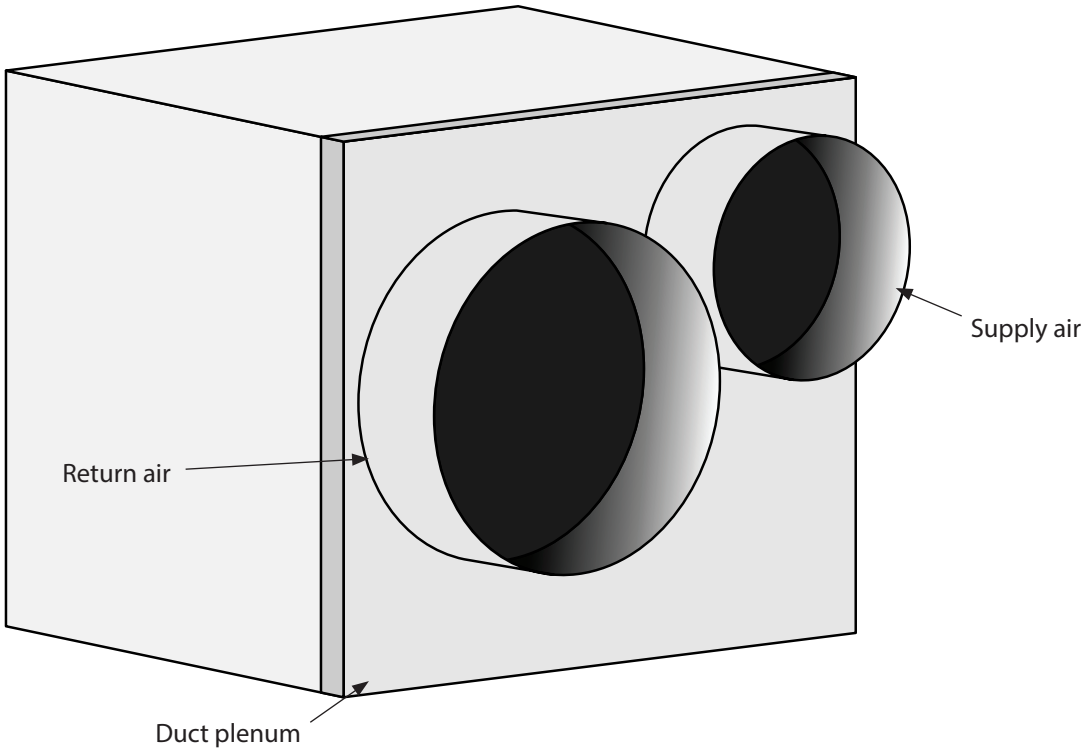

Fully Ducted — Rear / Side View

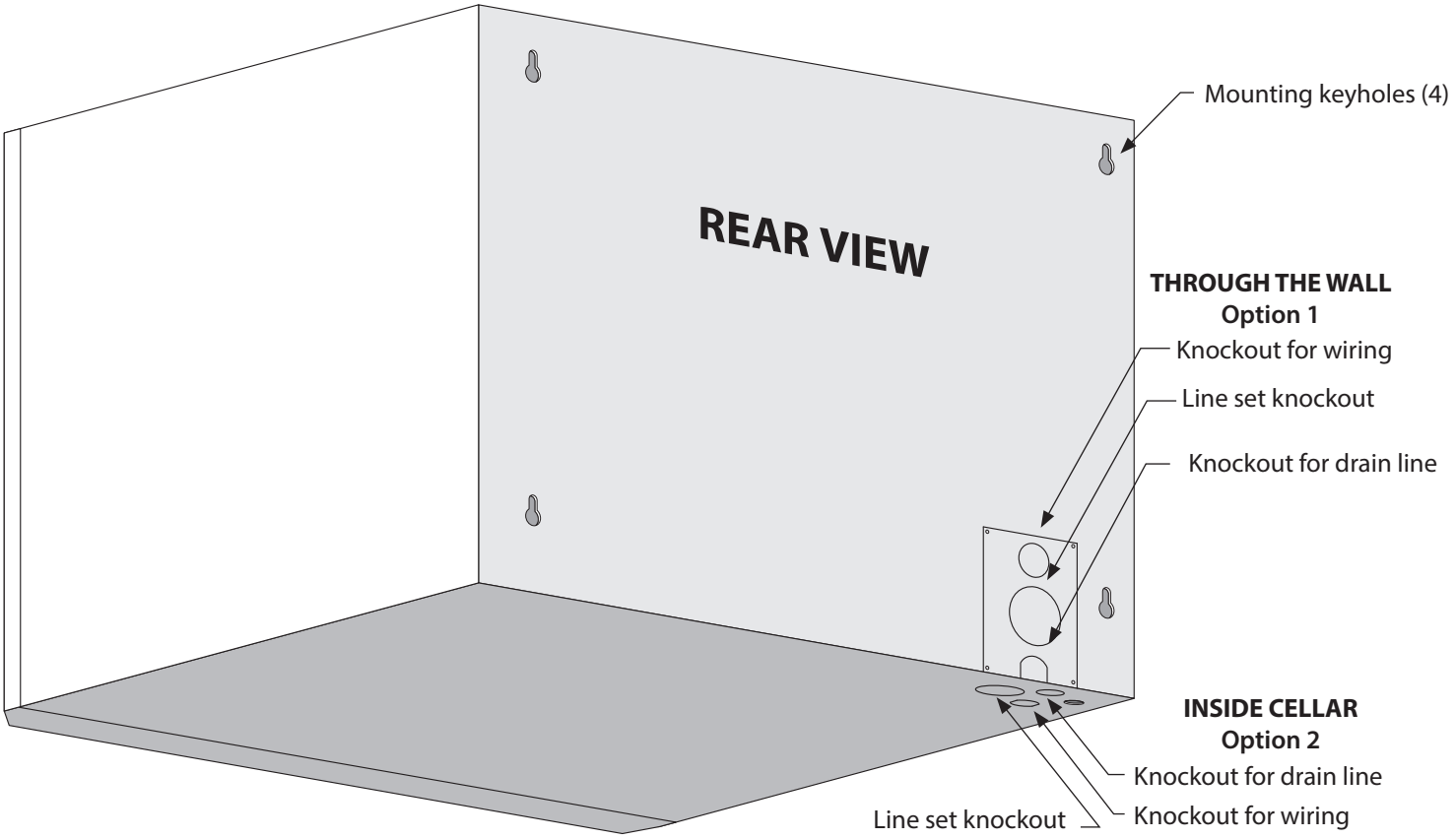

WALL-MOUNTED TWIN SPECIFICATIONS

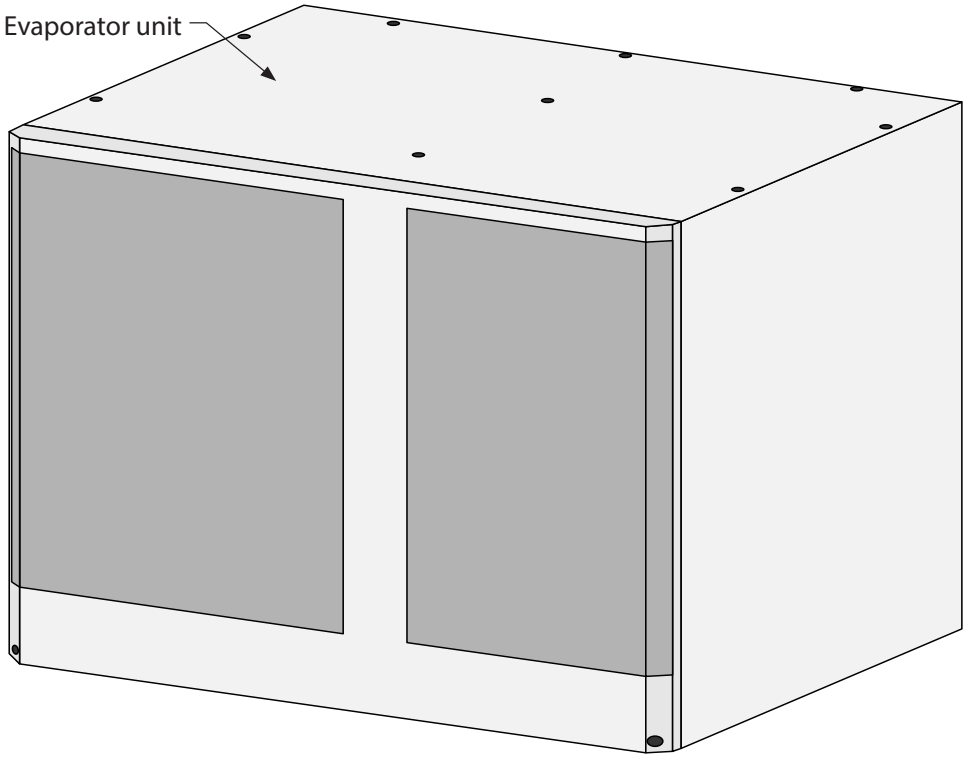

Model	9000 Master Evaporator (Fan Coil Unit)	9000 Slave Evaporator (Fan Coil Unit)
Cellar Size	Approx. 3000 cu. ft., provided cellar is fully insulated and sealed with proper vapor barrier*	
BTU/h w/85°F air entering the condenser coil	7850	7850
Dimensions	16.1"L x 20.5"W x 15.5"H	16.1"L x 20.5"W x 15.5"H
Refrigerant	R-134a	R-134a
Voltage Rating	115V (15-amp dedicated circuit required)	115V (15-amp dedicated circuit required)
Weight (lbs)	60	60
Amps	Evaporator: 1 running amp (per unit) Compressor: LRA 35, RLA 6.5	Evaporator: 1 running amp (per unit) Compressor: LRA 35, RLA 6.5
Line Set	Liquid line ⅜"; suction line ¾" (less than 50 ft.), ⅞" (greater than 50 ft.)	
Drain Line	½" ID clear plastic tubing (not provided)	
Installation	Evaporator units are installed in the cellar.	
Thermostat	Aftermarket (24V thermostat not included)	
Temp. Delta	Can maintain a 55°F temperature differential with up to 110°F condenser air intake temperature	
Warranty	Two-year limited warranty (parts and labor)	

*Each cellar is unique and has specific cooling requirements. Heat load calculations should always be performed prior to selecting a cooling unit.

FULLY DUCTED TWIN SPECIFICATIONS

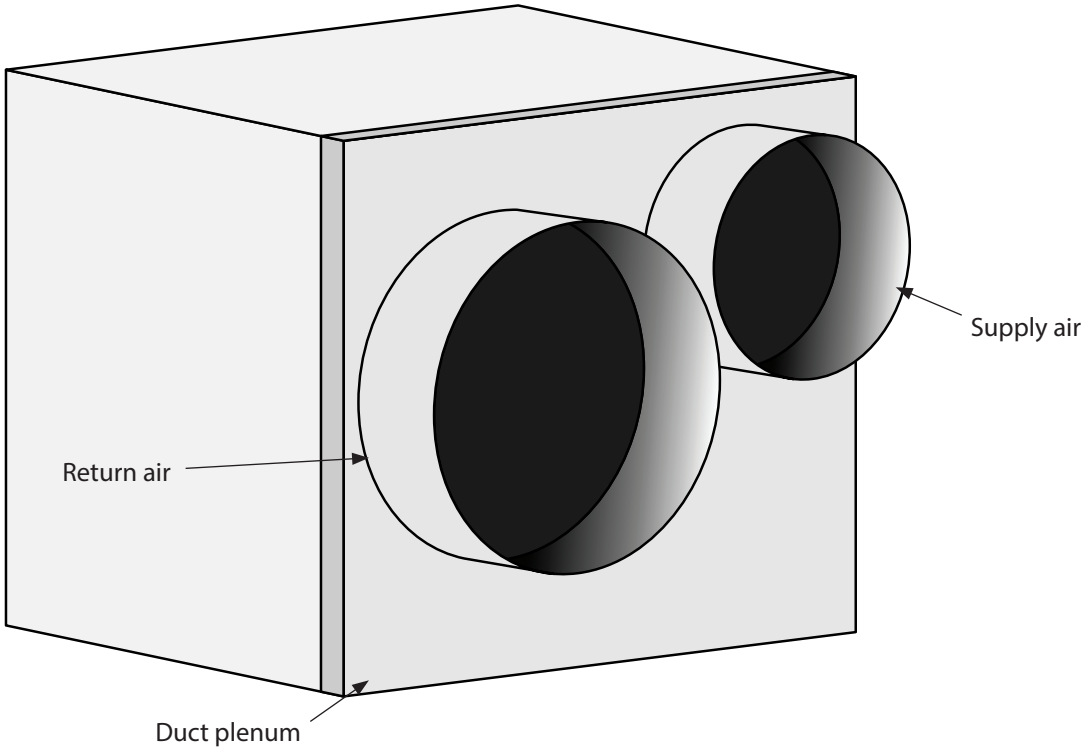

Model	9000 Master Evaporator (Fan Coil Unit)	9000 Slave Evaporator (Fan Coil Unit)
Cellar Size (cu. ft.)	Approx. 3000 cu. ft., provided cellar is fully insulated and sealed with proper vapor barrier*	
BTU/h w/85°F air entering condenser coil	7000	7000
Dimensions	20.1"L x 20.5"W x 15.5"H	20.1"L x 20.5"W x 15.5"H
Refrigerant	R-134a	R-134a
Voltage Rating	115V (15-amp dedicated circuit required)	115V (15-amp dedicated circuit required)
Weight (lbs)	60	60
Amps	Evaporator: 1 running amp (per unit) Compressor: LRA 35, RLA 6.5	Evaporator: 1 running amp (per unit) Compressor: LRA 35, RLA 6.5
Line Set	Liquid line ⅜"; suction line ¾" (less than 50 ft.), ⅞" (greater than 50 ft.)	
Duct Size	8" supply, 10" return (x2)	
Drain Line	½" ID clear plastic tubing (not included)	
Installation	Evaporator units can be installed up to 25 ducted feet away.	
Thermostat	Aftermarket (24V thermostat not included)	
Temp. Delta	Can maintain a 55°F cellar temperature with up to 110°F condenser air intake temperature	
Warranty	Two-year limited warranty (parts and labor)	

*Each cellar is unique and has specific cooling requirements. Heat load calculations should always be performed prior to selecting a cooling unit.

CONDENSING UNIT SPECIFICATIONS

Model	9000 Condenser (Air-Cooled Condensing Unit)
Dimensions	24”L x 18.98”W x 16.16”H
Refrigerant	R-134a
HP	3/4
Voltage Rating	230V (15-amp dedicated circuit required)
Weight (lbs)	95
Installation	Condensing unit can be installed up to 100 line feet from master evaporator unit.
Warranty	Two-year limited warranty (parts and labor)

SPLIT SYSTEM CHECKLIST

In order to activate the warranty for this product, the information here must be complete and accurate. Any incorrect or omitted information will result in a return trip by the installing technician at their cost.

DATA RECORDINGS

NOTE: All readings need to be taken while the compressor is running.

Line Set Information

A. Line set length:
B. Suction line OD:
C. Liquid Line OD:

Bottle Probe

A. Install probe in bottle of warm water to keep system operating.

Charging the System

A. Fill system until bubbles dissipate from sight glass.
NOTE: Be careful not to overcharge the system.

Temperature Differential at the Evaporator

A. Measure return air and supply air temperatures at each evaporator to ensure adequate cooling of air in cellar.

Sub Cooling

A. Measure head pressure at liquid line king valve. Convert pressure to temp using conversion chart.
B. Temp of liquid line at king valve:
C. Complete sub cooling calculation: A – B =

Superheat Master

A. Measure suction pressure at the suction line service valve, convert to temp.
B. Measure the temperature of the suction line at the outlet of the evaporator.
C. Complete superheat calculation: B – A =
NOTE: There may be a need to adjust the TXV to get the correct superheat levels.

Superheat Slave

A. Measure suction pressure at the suction line service valve, convert to temp.
B. Measure the temperature of the suction line at the outlet of the evaporator.
C. Complete superheat calculation: B – A =
NOTE: There may be a need to adjust the TXV to get the correct superheat levels.

Compressor Temperature

A. Measure temperature at bottom of compressor.
NOTE: Cool temp may indicate liquid in the compressor.

Voltage and Amp Draw

A. Measure voltage to compressor and amp draw.

Condensation Drain Test

A. Pour water into each evaporator unit's drain pans to ensure they drain properly.

24V WIRING CONNECTIONS (EVAPORATOR UNITS)

1. Route a standard 18-5 thermostat wire from the slave unit installation location to the master evaporator unit.
2. Route a standard 18-5 thermostat wire from the master unit installation location to the thermostat installation location.
3. Locate the 18-5 thermostat wires inside of the master evaporator unit.
4. Connect all wires according to color: yellow to yellow, green to green, blue to blue, and red to red.
5. Locate the 18-5 thermostat wires inside of the slave evaporator unit.
6. Connect the wires according to color: yellow to yellow, green to green, and blue to blue.

Thermostat Wiring Connections

1. At the thermostat terminal block, connect the wires according to color: yellow to Y, blue to C, green to G, and red to R.

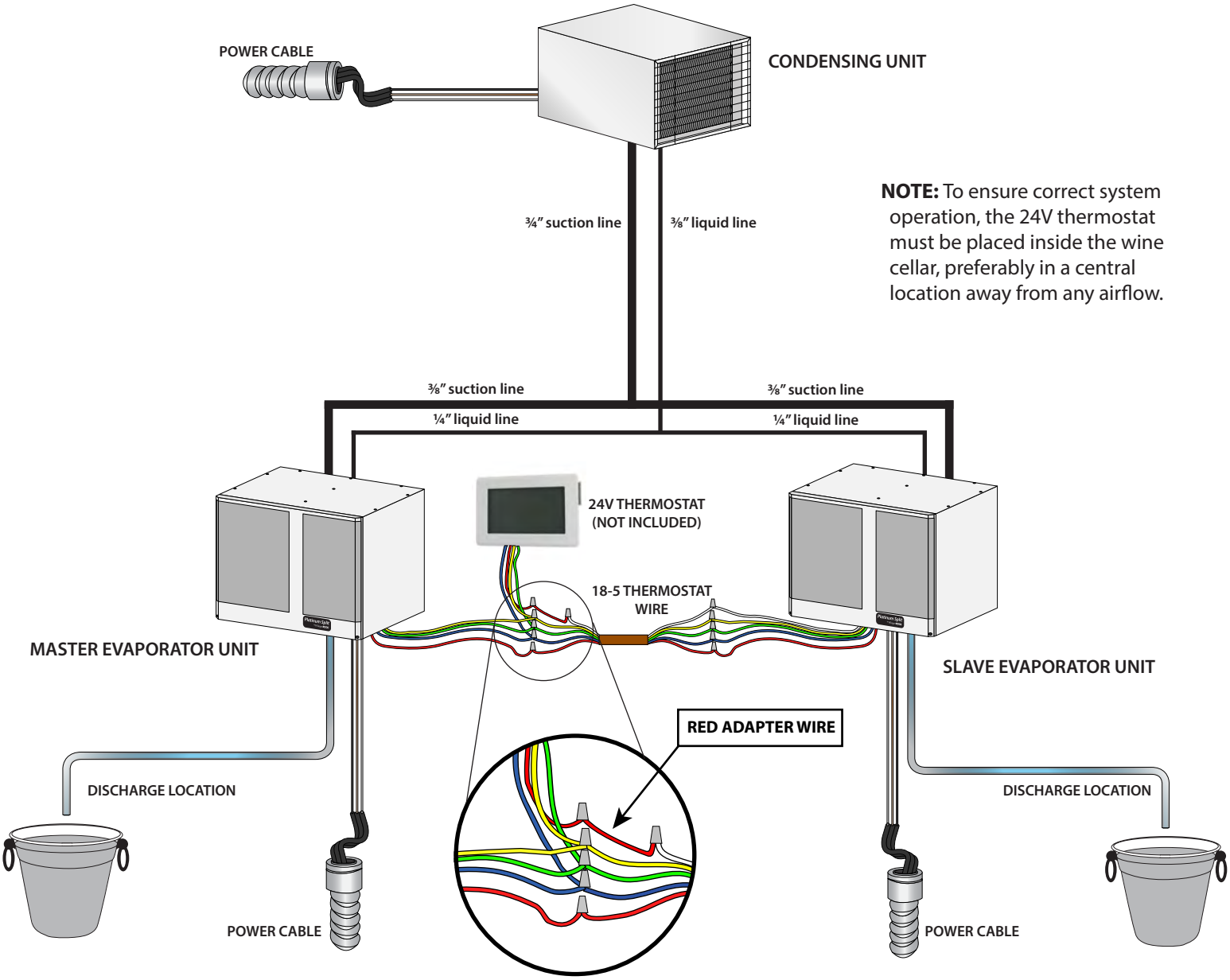

NOTE: To ensure correct system operation, the 24V thermostat must be placed inside the wine cellar, preferably in a central location away from any airflow.

PREPARING THE WALL-MOUNTED EVAPORATOR UNITS

Required Tools:

- Drill
- 5⁄32″ drill bit
- ¼″ socket drill bit
- ¼″ wrench
- Phillips-head screwdriver
- Tape measure
- Brazing torch
- Drywall saw
- Ladder
- Level
- Pliers
- Pencil

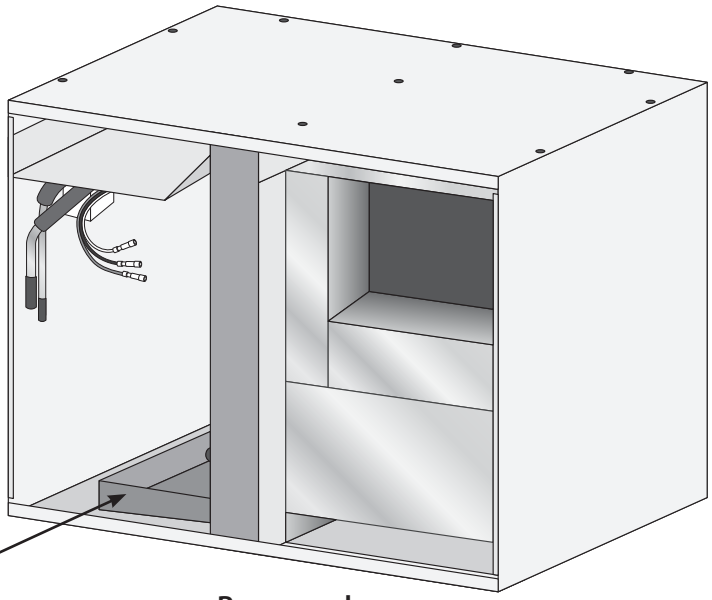

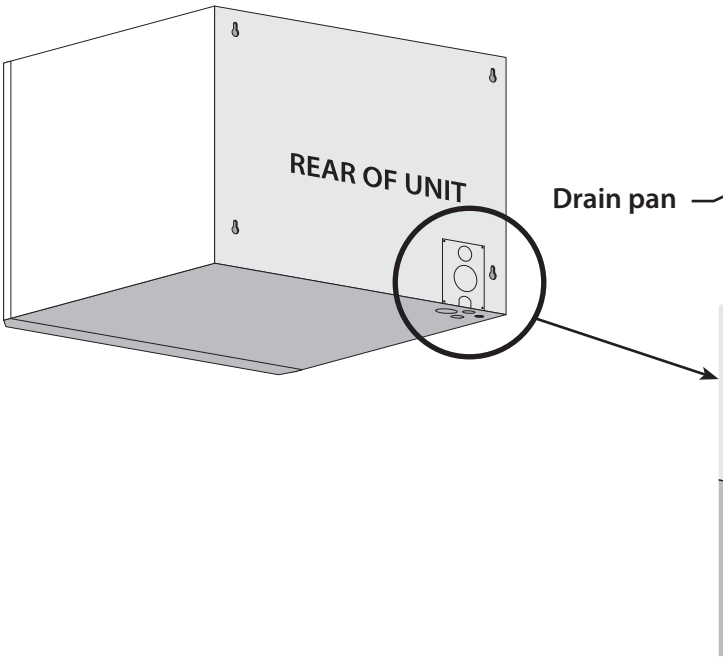

1. Remove the rear panel and set aside.
2. For ease of installation, remove the nine (9) screws securing the top and remove the top.
3. Install strain relief around thermostat wires if routed through the circular connector hole in the bottom corner (see illustration).

INSTALLING THE WALL-MOUNTED EVAPORATOR UNITS

Refer to the Wall-Mounted Evaporator Unit Installation Template for more information about mounting the wall-mounted evaporator units.

1. Locate two (2) wall studs in the desired mounting location spaced 16″ on center.
2. Mark vertical lines on each stud 16″ apart.
3. Mark an intersecting horizontal line at the desired height of the unit.
4. Make a mark on each stud 13½″ down from the intersection of the horizontal and vertical lines.

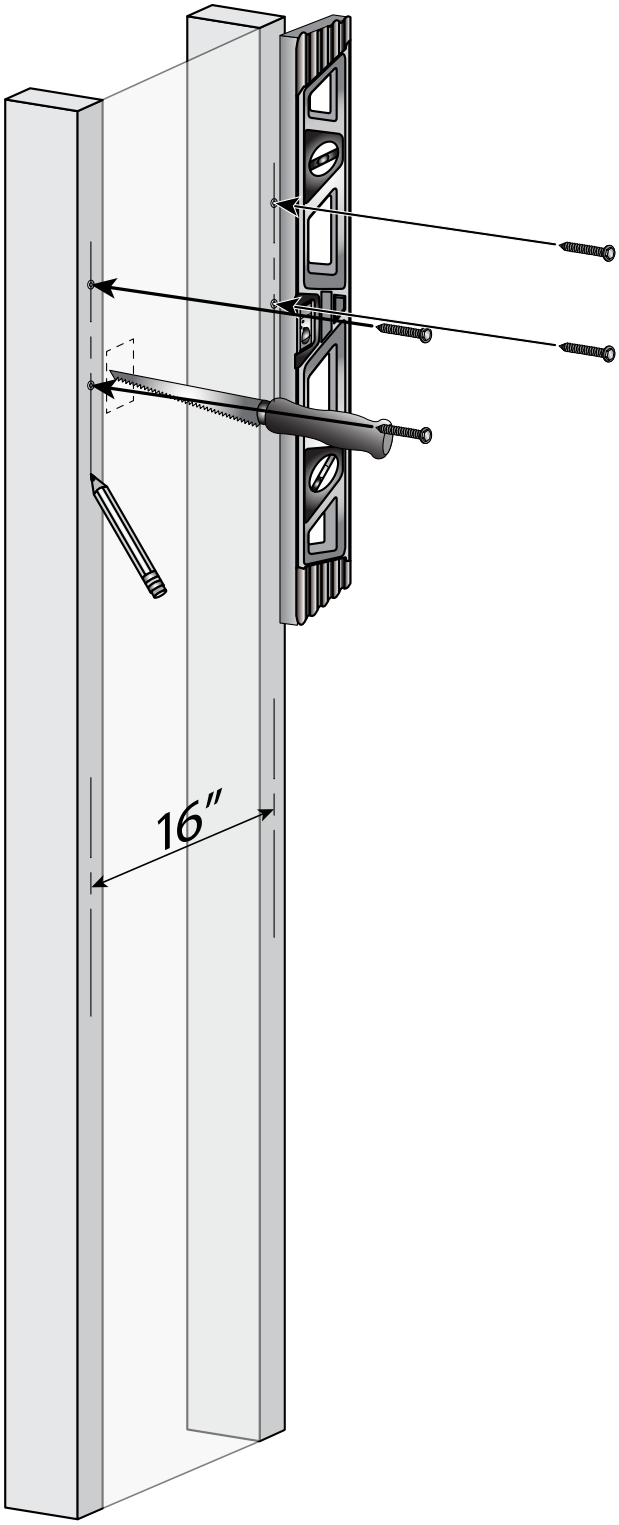

NOTE: The top of the unit must be installed a minimum of 6″ and a maximum of 18″ from the ceiling.

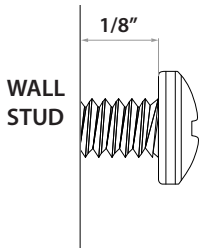

5. Install the four (4) supplied 1¾″ hex-head screws into the studs at the locations marked leaving ⅛″ between the wall surface and screw head.
6. If routing through a wall, cut out an access hole for the line set, drain line, display cable, and power wires.
7. Raise the evaporator to the installation location. Align the rear keyholes with the mounting screws and mount the unit.
8. Using a ¼″ wrench or socket, tighten the top mounting screws.
9. Using ¼″ and ⅜″ copper tubing, route the liquid and suction lines through the knockouts in the housing. Be sure to extend the tubing far enough outside of the housing to extend through the wall if necessary.
10. Wrap both sides of the copper tubing with a wet rag to prevent overheating.
11. To prevent oxidation, purge the system with nitrogen.
12. Braze the copper tubing to the connections on the evaporator unit.

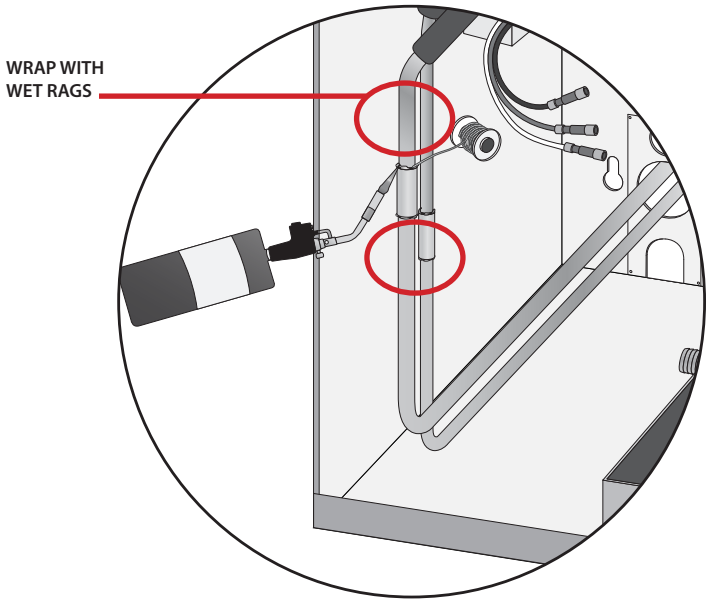

13. Insulate the suction line using Armaflex or similar insulation.
14. Using the cable ties and cable tie mounts provided, secure the drain line to the bottom of the housing to ensure a downward slope.
15. Route the power wires through the knockouts.
16. Connect the power wires according to color: connect the ground wire to the green wire, the hot wire to the black wire, and the neutral wire to the white wire.
17. Follow the instructions on page 12 for low-voltage wiring connections.

PREPARING THE FULLY DUCTED EVAPORATOR UNITS

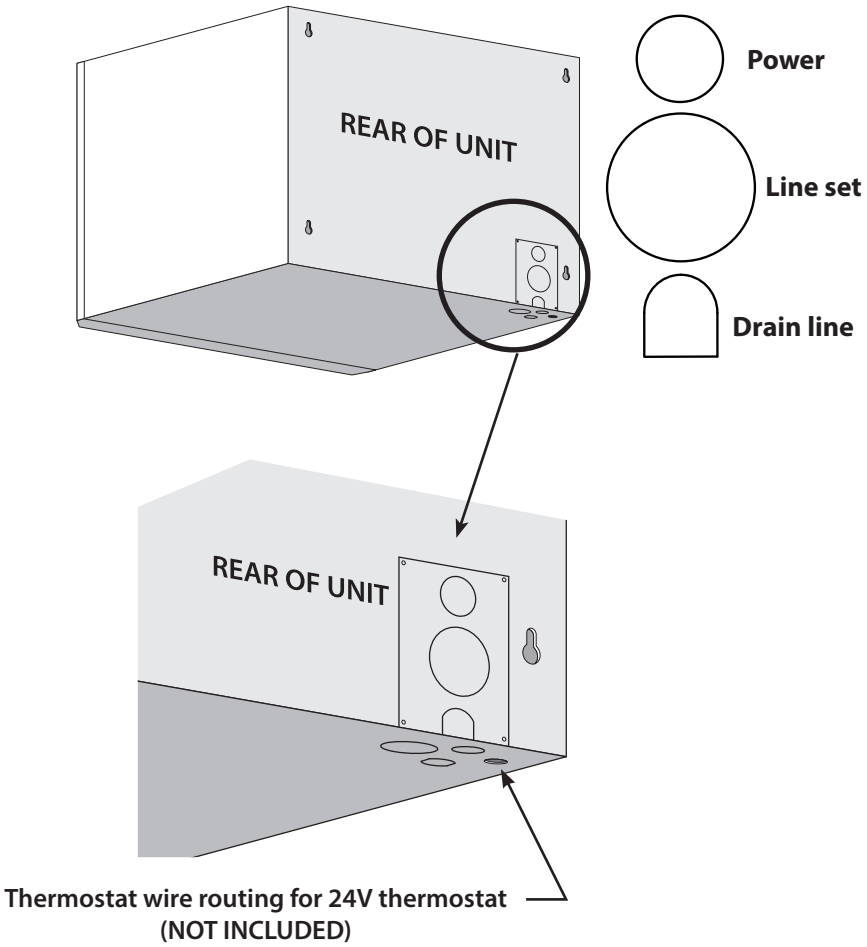

1. Remove the knockouts that you will be using to route the line set, power wires, and drain line.
2. Remove the insulation from the knockout holes.
3. For ease of installation, remove the nine (9) screws securing the top and remove the top.

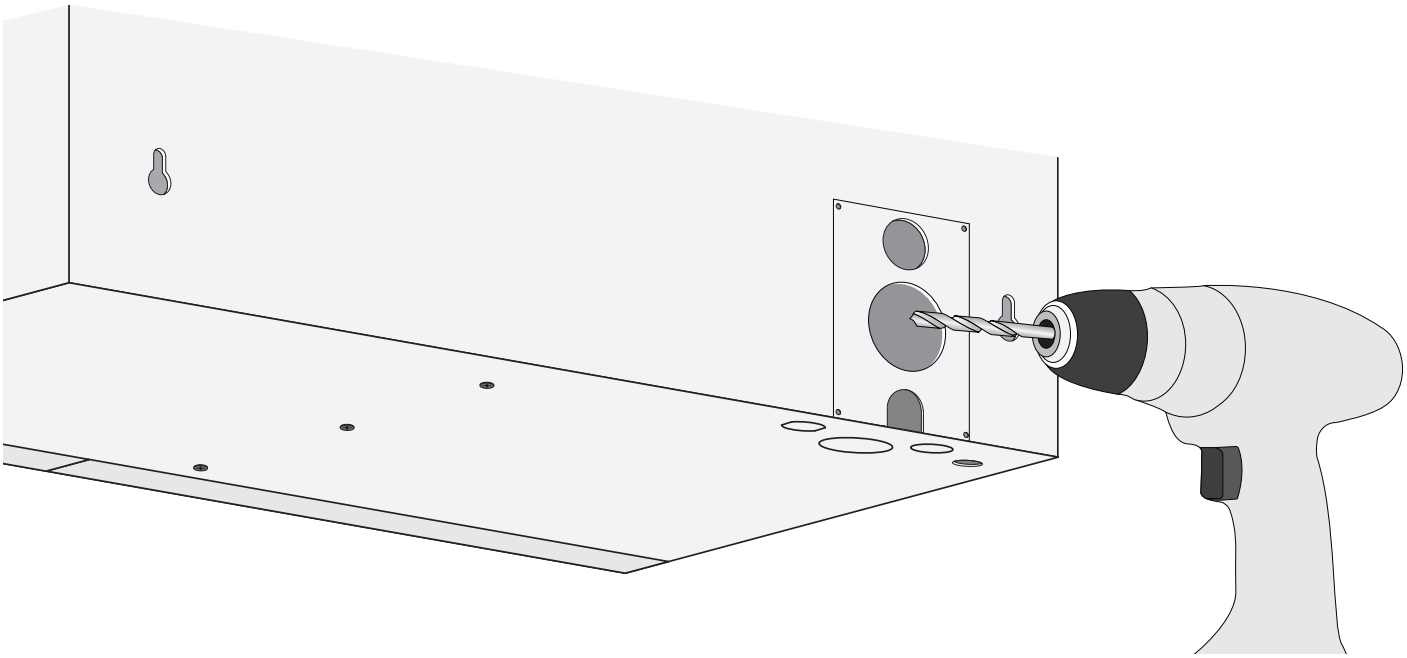

INSTALLING THE FULLY DUCTED EVAPORATOR UNITS

1. Using ¼" and ⅜" copper tubing, route the liquid and suction lines through the knockouts in the housing. Be sure to extend the tubing far enough outside of the housing to extend through the wall if necessary.
2. Wrap both sides of the copper tubing to prevent overheating.
3. To prevent oxidation, purge the system with nitrogen.
4. Braze the copper tubing to the connections on the evaporator unit.
5. Insulate the suction line using Armaflex or similar insulation.
6. Using the cable ties and cable tie mounts provided, secure the drain line to the bottom of the housing to ensure a downward slope.
7. Route the power wires through the knockouts.
8. Connect the power wires according to color: connect the ground wire to the green wire, the hot wire to the black wire, and the neutral wire to the white wire.
9. Follow the instructions on page 12 for low-voltage wiring connections.

DUCTING OVERVIEW

Use ductwork to connect the unit to the supply and return outlets in the wine cellar. Use only insulated ductwork to minimize cooling losses, prevent sweating, and reduce noise. Use ductwork on the condenser section to redirect or absorb sound, bring in outside air to the unit inlet, and/or exhaust the hot air.

NOTE: Do not exceed a total of 25 feet for each length of ductwork run and a combined total of 50 feet for both the supply and return lengths.

Avoid crimping the flexible ducts. This reduces airflow, causing the unit to operate improperly. Be sure all ductwork and outer surfaces in contact with the airflow are insulated and have a vapor barrier on the outside. Uninsulated supply and return ducts may cause bare, exposed metal surfaces to sweat, further degrading the insulation and equipment cooling capacity.

Do not allow sharp turns to squeeze or decrease the inside diameter of the flexible ducting.

General duct recommendations:

- Provide support for the flexible duct to prevent sags and bends.
- WM/FD 9000 Twin-S duct size: 8" supply and 10" return
- Stretch out the duct to make a smoother interior which reduces air resistance.
- Maximum duct length is 25 feet per evaporator unit.
- For 90° bends, use a 90° adjustable elbow.
- No more than two 90° bends on each duct. Sweep 90° bends are recommended rather than sharp 90° bends.

  NOTE: For every 90° bend, the system loses 13 CFM of airflow.

  NOTE: A 12" x 12" return air filter grille must be installed to prevent contaminants from entering the cooling system. Supply duct must be insulated so it does not sweat or pick up heat.
- Generously apply duct sealant to all metal seams to fill in gaps that can leak air. Allow sealant to dry until firm to the touch before applying fiberglass insulation.
- Do not squeeze or reduce the inside diameter of the ducts, as this will reduce airflow.
- Use short and straight ductwork where possible.
- Check that all fan blades move freely.
- Keep air paths free of loose foreign objects and debris.
- Locate the supply and return grilles inside the cellar to create an airflow pattern that maximizes air circulation in the room. Avoid short circulation of the air.
- If the unit is installed through the wall, it must be mounted no more than 18 inches from the wine cellar ceiling. If the unit is ducted, the cold air supply duct must be installed no more than 18 inches from the wine cellar ceiling.

DO NOT:

- Install through-the-wall return air grilles at floor level where they will collect dust from the floor.
- Locate the supply or return air grille where it is blocked by bottles, boxes, or cases.

DUCTING CONFIGURATIONS

There are several ways to duct this unit. Please review the different configurations to determine a basis for your particular installation. Remember to contact a wine cellar professional if you have any questions.

Indoor Installation

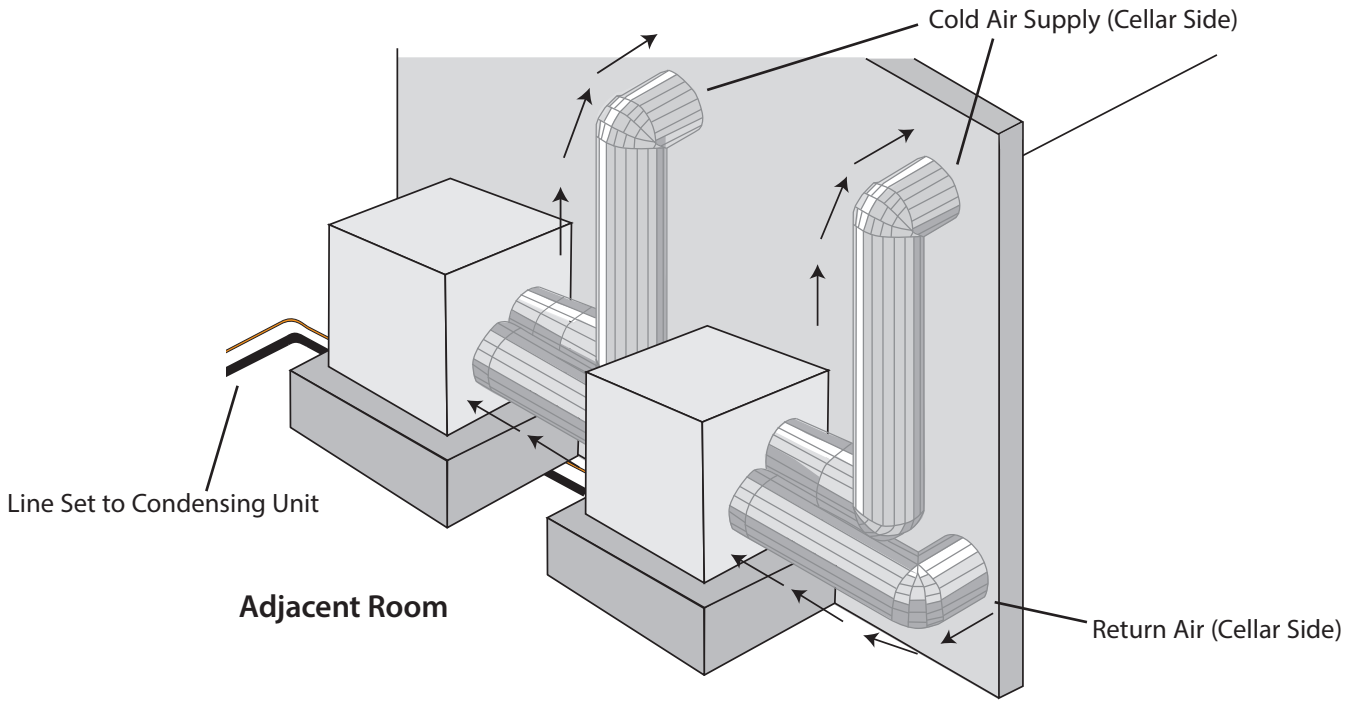

Attic Installation

It is recommended that you use a condensate pan for this application.

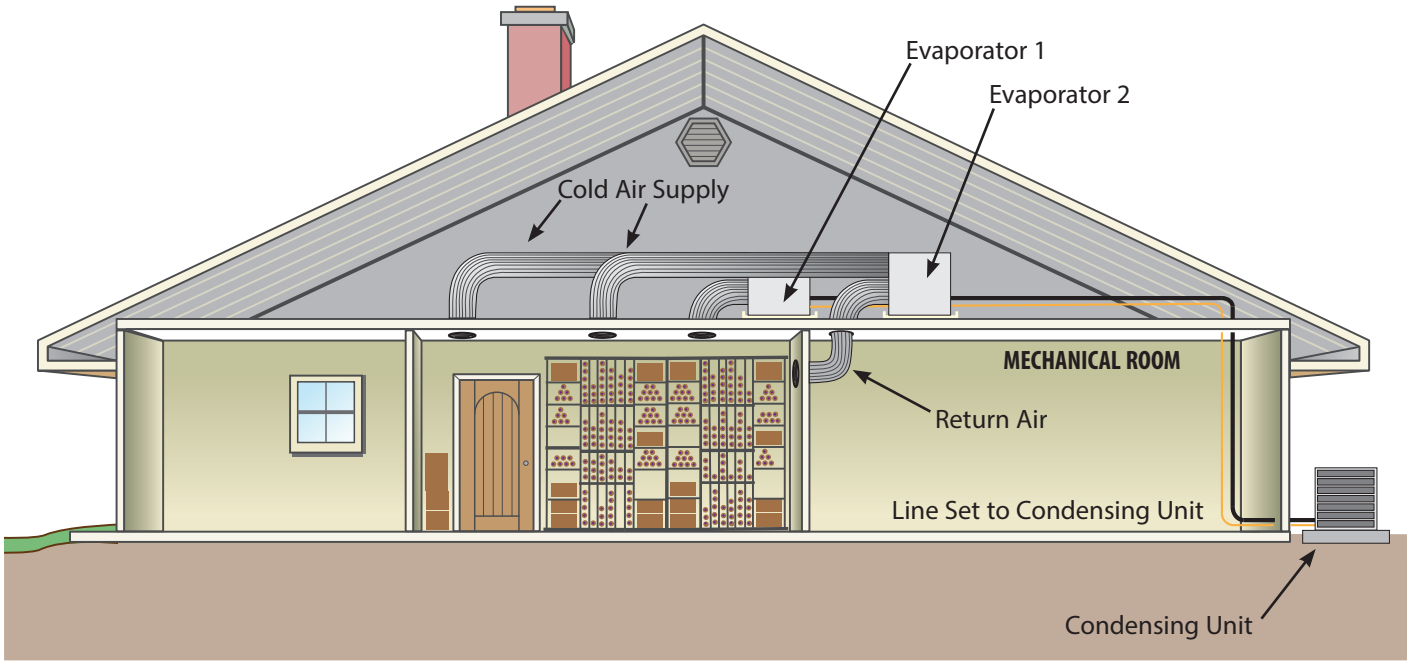

DRAIN LINE

Condensation Drain Line (not provided, but required)

The condensation drain line tube moves excess condensation from the evaporator units to a proper discharge location. It is important for the drain line tube to be properly connected in order to prevent leakage and other problems associated with excess condensation. (Each evaporator requires its own dedicated drain line.)

Failure to use the condensation drain line tube will void the warranty on the unit.

Drain Line

Each evaporator unit comes with a drain line connection tee and two 90° fittings. Each unit is equipped with a ½" OD barbed fitting coming from the drip tray. (**NOTE:** ½" ID clear PVC tubing will need to be purchased and installed by the installing technician.) Installation of the drain line is mandatory, whether it leads through the wall and out of the cellar or remains inside the cellar. During operation, the cooling system will strip excess water from the air in order to maintain the proper level of humidity within the cellar. However, in extreme humidity, additional condensate will be removed; thus the drain line will prevent overflow and leakage by discharging the excess condensate.

Routing the tubing out of the unit:

Cut a small piece of ½" tubing and connect one end to the drip tray port and the other to a 90° fitting. (This will direct the tubing toward the back of the unit where the tube will exit the unit.) Be sure to extend the tubing far enough outside the housing to extend through the wall if necessary.

If routing out of the rear: Cut a piece of tubing long enough to protrude out of the knockout on the back side of the unit.

If routing out of the bottom: Cut a piece of tubing long enough to reach the knockout in the bottom of the unit and install the supplied 90° fitting. (This will direct the tubing out of the bottom of the unit without the risk of kinking the tubing.) ***DO NOT USE TEE WHEN ROUTING OUT OF THE BOTTOM.***

Routing to discharge location if routed out of the bottom:

Connect the drain line directly to the second 90-degree barb fitting previously installed. Route the drain line to an appropriate drain location. No tee is required if draining through the bottom of the unit.

WRONG: Drain line is under water.

Routing to discharge location if routed out of the rear:

Insert the middle barb of the barbed tee fitting into the end of the drain line coming from the evaporator. Rotate fitting so tee is in the orientation shown in the diagram below. Connect a 3-inch piece of ½" drain line to the barb on top. Connect the remaining "long" piece of drain tubing to the bottom barb of the tee. Route the drain line to an appropriate drain location.

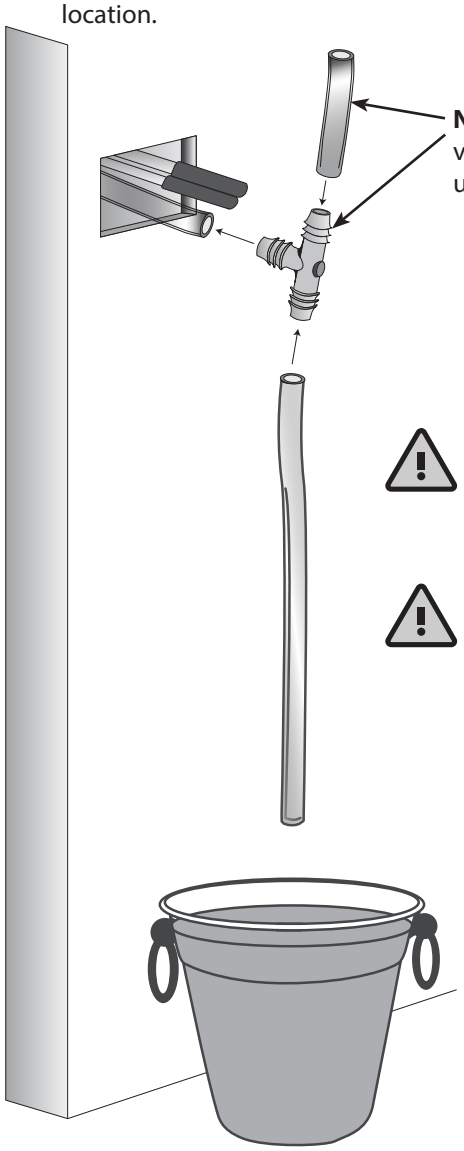

NOTE: The fitting should be placed vertically with the 3" cutout facing up.

Failure to install the drain line voids the warranty.

To prevent mold from growing, allow the drain line to hang above the water line.

WM/FD 9000 TWIN-S WITH 24V THERMOSTAT CONVERSION KIT WIRING DIAGRAM

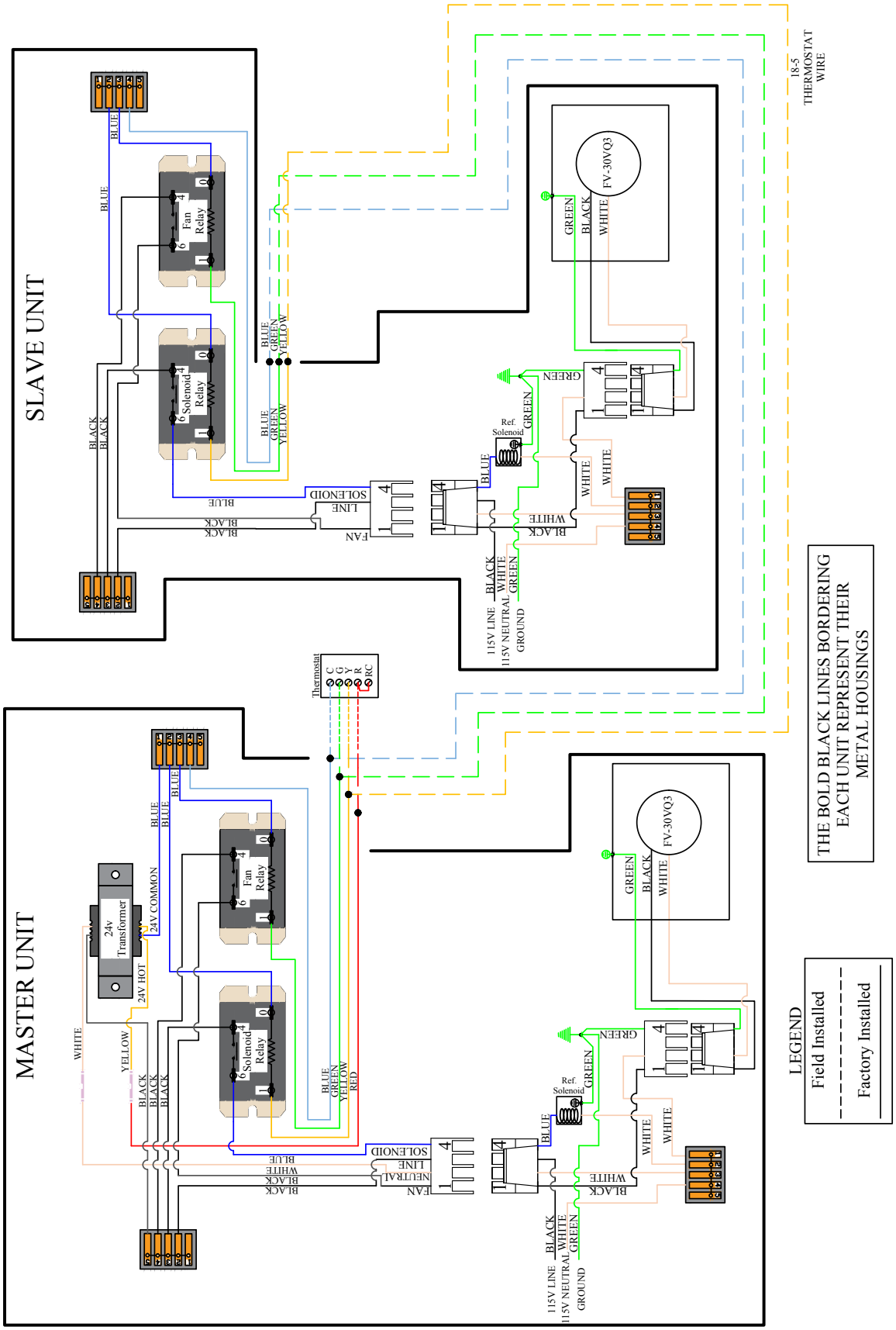

WM/FD 9000 TWIN-S MASTER EVAPORATOR WITH 24V THERMOSTAT CONVERSION KIT WIRING DIAGRAM

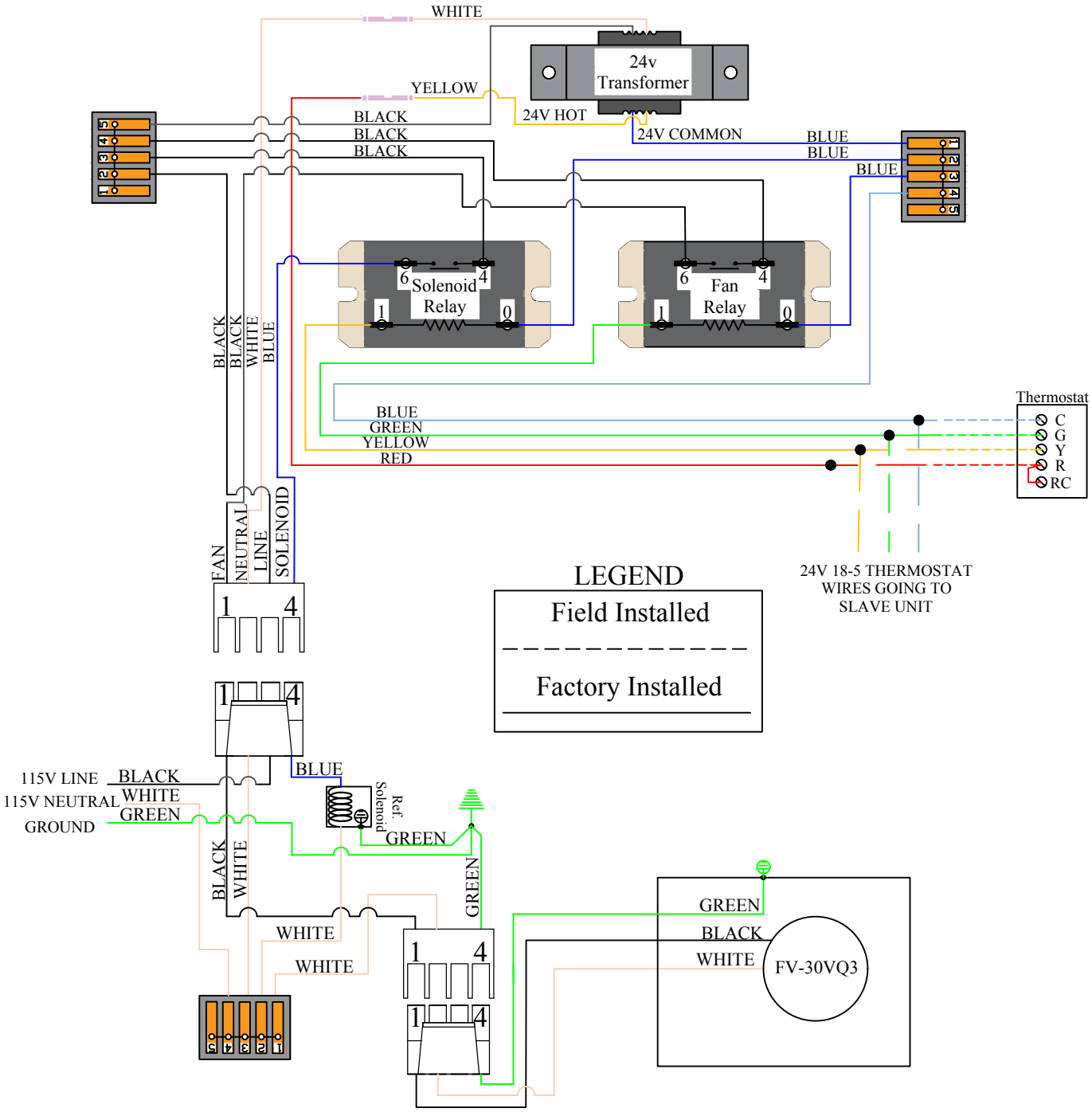

WM/FD 9000 TWIN-S SLAVE EVAPORATOR WITH 24V THERMOSTAT CONVERSION KIT WIRING DIAGRAM

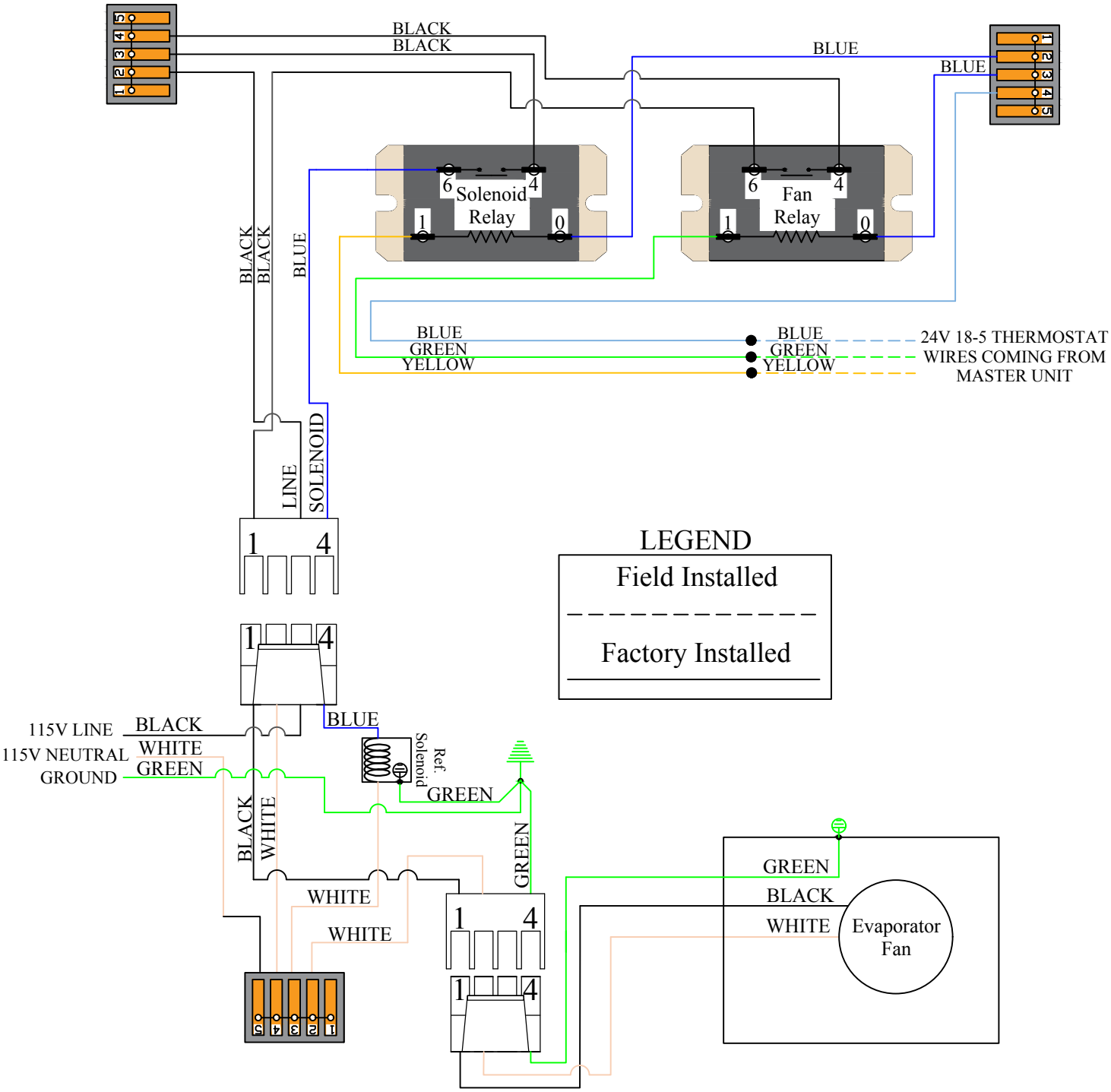

WM/FD 9000 TWIN-S CONDENSING UNIT WIRING DIAGRAM

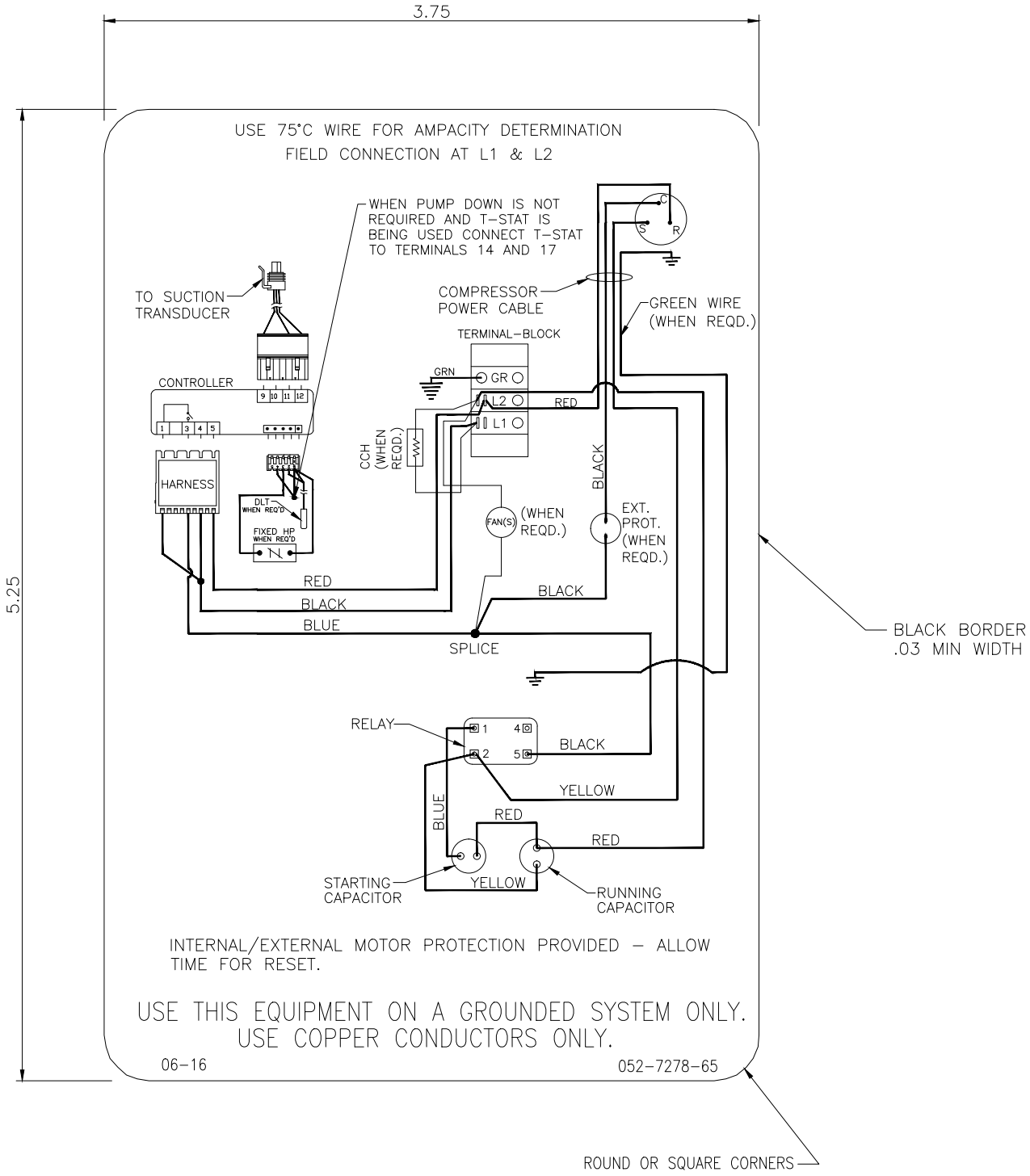

COPELAND COLD WEATHER START KIT WIRING DIAGRAM

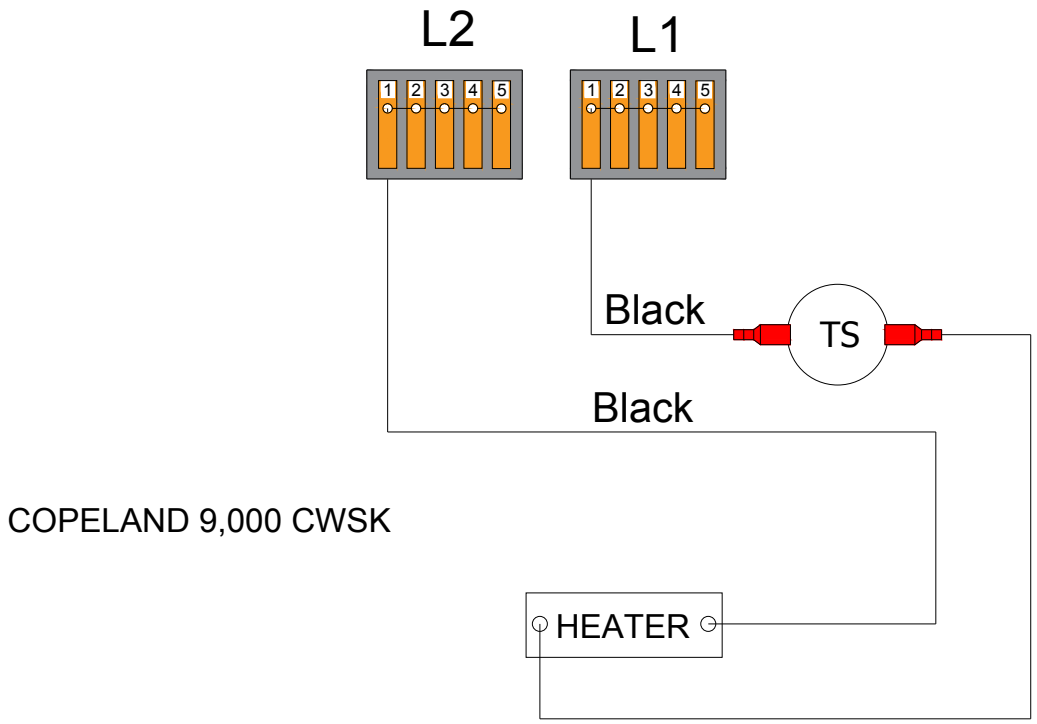

PREPARING THE CONDENSING UNIT

Electrical Needs

The condensing unit requires a dedicated 230V single-phase 15-amp circuit. The unit draws a large inrush current for about 1 second the instant the compressor starts. With a dedicated circuit and circuit breaker, the condensing unit will have sufficient power for effective operation. (The compressor is controlled by a low-pressure switch mounted on the condensing unit. This feature eliminates the need for wiring between the evaporator unit/fan coil unit and the condensing unit.)

- Ensure the voltage supplied matches the rating specified on the unit spec label.
- Provide a dedicated circuit and circuit breaker for the condensing unit.
- Provide a weatherproof disconnect for the condensing unit if it is located outside.

Power surges and spikes can damage sensitive electrical equipment. CellarCool recommends plugging the unit into a surge protector or power conditioner in order to protect your system. As outlined in our terms and conditions, power surges and spikes are not covered under warranty.

DO NOT USE A GROUND FAULT INTERRUPTER (GFI) WITH THIS PRODUCT.

In case the system should lose power, check the home/main circuit breaker. If the system does not respond properly, refer to the Troubleshooting Guide on page 38.

INSTALLING THE CONDENSING UNIT

The condensing unit can be installed inside a well-ventilated area of the home, but it is typically installed outside. Exterior applications will require the use of a protective housing, and the amount of sun exposure should be considered when selecting the placement of the condensing unit. **Make sure there is a minimum of three (3) feet of horizontal clearance in every direction around the unit (five feet is ideal).** Check that proper power is supplied.

Set the condensing unit level and with proper clearances in accordance with the instructions. As designated on the name plate, make sure that the proper electric disconnect and fuse protection have been installed. Ensure that the unit is connected but not turned on and is ready for refrigerant piping connections.

Indoor condensing unit installation:

Inside installations require special consideration, as there must be adequate ventilation to remove the heat created during normal operations. An exhaust port with fan may need to be installed to ensure that heat is effectively removed from the utility room. The cellar will need a return grille or some other provision for 800-1000 CFM of cool air to enter the room to replace the exhausted air. Unobstructed airflow to and from the unit is a critical factor in the unit's overall performance. **Make sure there is a minimum of three (3) feet of horizontal clearance in every direction around the unit (five feet is ideal).** This will assure that the unit can move the air around the room in an efficient manner.

Outdoor condensing unit installations:

You must utilize the exterior condensing unit housing for outdoor installations. Place the condensing unit on a solid foundation in a location with adequate ventilation. **Make sure there is a minimum of three (3) feet of horizontal clearance in every direction around the unit (five feet is ideal).** The unit should be elevated 18" in order to avoid any possible flooding or damage by animals, and should be clear of leaves, dirt, and other debris.

LINE SET PIPING DIAGRAMS

It is required to size the suction line tubing according to this chart.

Platinum Split Twin	Line Set Length	<25ft	26-50ft			50-100ft		
	Vertical Rise	15ft	<3ft	3-10ft	>10ft	<3ft	3-10ft	>10ft
	Suction Line Sizing	¾″				⅞″		
	Liquid Line Sizing	⅜″			⅜″			

Condensing Unit Installed Below Fan Coil
Option 1

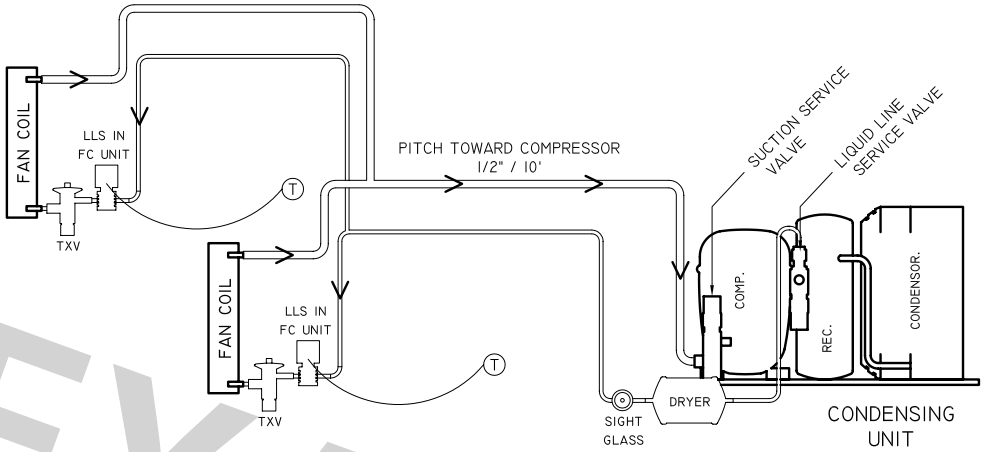

SINGLE FAN COIL PIPING SYSTEM
RECOMENDED REFRIGERANT PIPING DESIGN FOR CONVENTIONAL FACTORY SUPPLIED FAN COIL AND AIR COOLED CONDENSING UNIT COMPONENTS. REFRIGERANT LINE LENGTHS IN EXCESS OF 90' NOT RECOMMENDED.

THIS DRAWING APPLIES TO CONDENSING UNIT LOCATION AT OR BELOW THE ELEVATION OF THE FAN COIL UNIT. SUCTION PIPE TO BE INSULATED WITH 1/2" WALL INSULATION (ARMAFLEX BRAND) OR EQUAL.

EXAMPLE

Condensing Unit Installed More Than 3' Above Fan Coil
Option 2

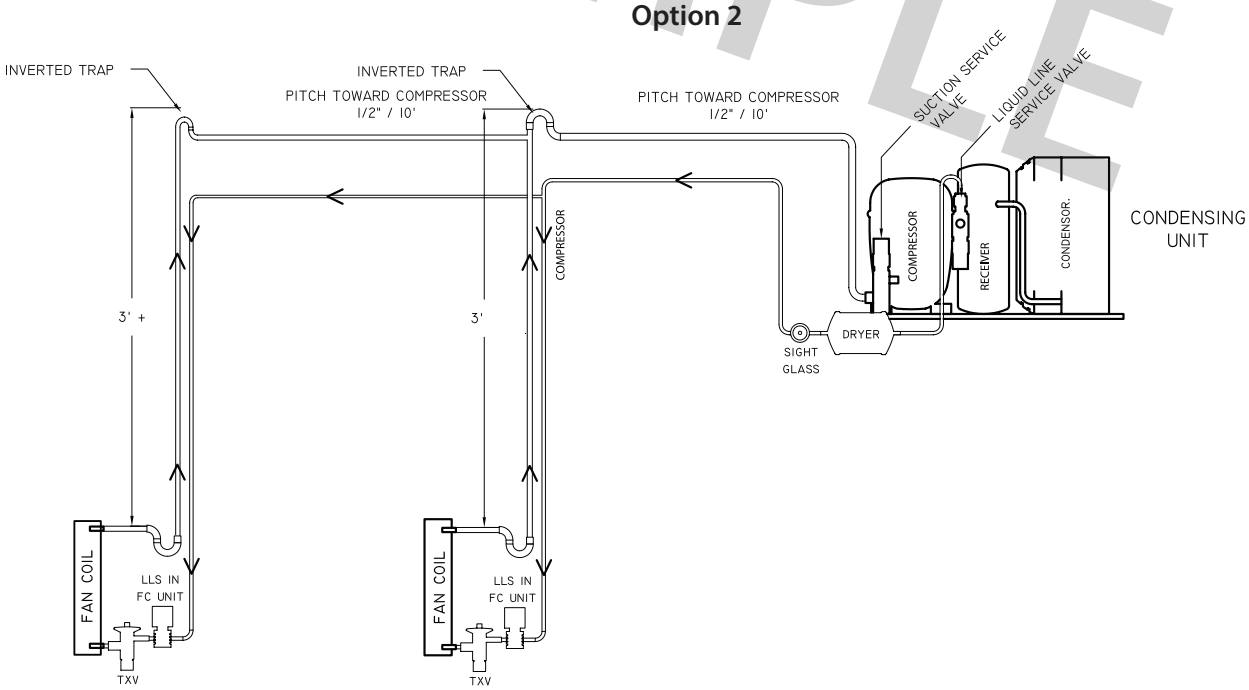

INSTALLING THE CONDENSING UNIT

DO NOT BLOCK airflow through the exterior housing. This will restrict airflow and void the warranty.

Refrigerant Piping Overview

- Using the charts and illustrations found above, route the line set between the evaporator units and the condensing unit. Be sure to reference the chart for correct line set sizing. All horizontal suction piping should be pitched toward the condensing unit half an inch for every 10 feet of pipe. When installing and routing the line set, cap both ends of each tube to prevent debris from entering the tubing.
- Prior to connecting the piping to the evaporator and condensing units, loosely connect a refrigerant manifold to the suction and liquid line service valves.
- Purge the hoses with dry nitrogen and tighten the hose connections.
- Remove the service valve caps and turn the valve stem clockwise half a turn to unseat the valve and open the service port. Keep the piping ports sealed until ready to braze.
- Purge the fittings with dry nitrogen at a slow rate to prevent formation of highly abrasive copper oxide.
- Perform all brazes.
- Pressure-test the system and check for leaks.
- Insulate the suction line using wall cellular insulation or equivalent. Seal all seams with Armaflex 520 foam insulation adhesive or equivalent. Wrap each seam using line set tape.

Liquid Line Piping Procedure

- Braze a short piece of copper tubing to the liquid line service valve.
- Connect the supplied refrigerant drier to the tubing.
- Downstream from the drier, connect the moisture-indicating sight glass in an easily visible location.
- Run the tubing to the evaporator units and attach to the liquid line connection on the evaporator units.

Suction Piping Procedure

- Install an access valve at the outlet of the evaporator units.
- Connect an appropriately sized suction line to the suction line service valve on the condensing unit.
- Run the pre-insulated suction line to the evaporator units and attach to the suction line connection on the evaporator units.

Brazing Procedure

- Connect the bottle probe to the master evaporator unit.
- Fill a wine bottle 75% full of room-temperature water. Insert the bottle probe into the neck of the bottle as far as possible. It is important that the bottle probe stopper be compressed by the neck of the bottle to ensure water will not leak.
- Energize the master evaporator unit and set the controller to call for cooling.
- Verify that the setpoint on the control is set low enough to allow the unit to run for the entire length of the brazing, evacuation, and charging procedure.
- Remove the valve depressors from the gauge hoses on a four-valve manifold.
- Connect the manifold to the low-pressure service valve port on the condensing unit and a nitrogen tank.
- Open the suction line service valve and purge the system with nitrogen.
- Braze all connections and cool off quickly.
- Cap the access valve on the suction line.
- Connect the high-pressure hose from the manifold to the liquid line service valve port.
- Pressure test the system at 250 psig for 30 minutes.
- Check all braze joints with leak detector or soap bubbles.
- Release the nitrogen once it is confirmed that there are no leaks.

INSTALLING THE CONDENSING UNIT (continued)

Evacuation

- Remove the nitrogen tank from the manifold and attach the manifold to the refrigerant tank.
- Install a micron gauge on the access valve near each evaporator unit.
- Mid-seat both service valves.
- Install service caps on the valves.
- Energize the liquid line solenoid valve.
- After confirming that there is fresh oil in the vacuum pump, connect the ⅜" hose from the manifold to the pump.
- Start the pump and run it until the micron gauge on each evaporator unit reads 200 microns or less.
- Disconnect the vacuum pump from the system.
- Break the vacuum with R-134a refrigerant.
- Remove the micron gauge from the access valve.

Charging

- Install a low-pressure gauge on the access valve near each evaporator unit.
- With the power off to the condensing unit, admit liquid refrigerant through the liquid line service valve until the refrigerant stops flowing.
- Turn on the circuit breaker for the condensing unit. The compressor should turn on if the pressure in the suction line is above 25 psig.
- Add refrigerant through the suction line service valve by throttling in small amounts of liquid refrigerant in two-second intervals. (Refrigerant must be throttled in or the compressor may be damaged.) Observe the sight glass. If bubbles are present, add more refrigerant until the sight glass is clear.
- Once the sight glass is clear, check the superheat at the suction line service valve. Adjust the TXV until the total superheat is between 20-30°F.
- Under normal operation, with the wine cellar at 55°F and the ambient temperature at 85°F, the low side pressure should be between 28-32 psig and the high side should be between 160-180 psig.

Finalizing the Installation

- Confirm that the entire suction line from the TXV to the suction line service valve is insulated using cellular insulation or equivalent. Seal all seams with Armaflex 520 foam insulation adhesive or equivalent.
- Confirm that the control is displaying the correct temperature.

INSTALLING THE WALL MOUNT KIT

1. If removed, reinstall the top panel of the unit housing.
2. Align the front grille with the four (4) ball studs on the housing. Push the front grille onto the ball studs until it snaps into place.
3. Using a Phillips-head screwdriver, fasten the bottom two (2) screws to fasten the grille to the unit.

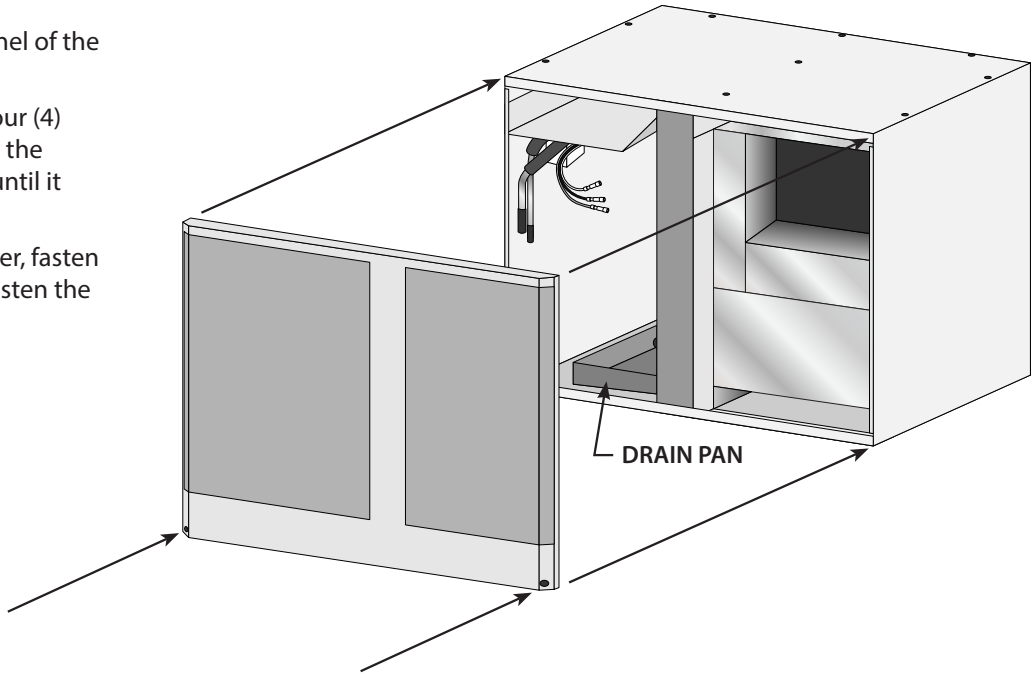

INSTALLING THE DUCTED PLENUM

1. If removed, reinstall the top panel of the unit housing.
2. Align duct plenum with the four (4) ball studs on the housing. Push the duct plenum onto the ball studs until it snaps into place.
3. Using a Phillips-head screwdriver, fasten the bottom two (2) screws to fasten the plenum to the unit.
4. Connect the supply and return duct work to the unit.
5. Using duct tape or foil tape, seal the seam between the plenum and unit.
6. Insulate all exposed metal on the unit to prevent surface condensation.

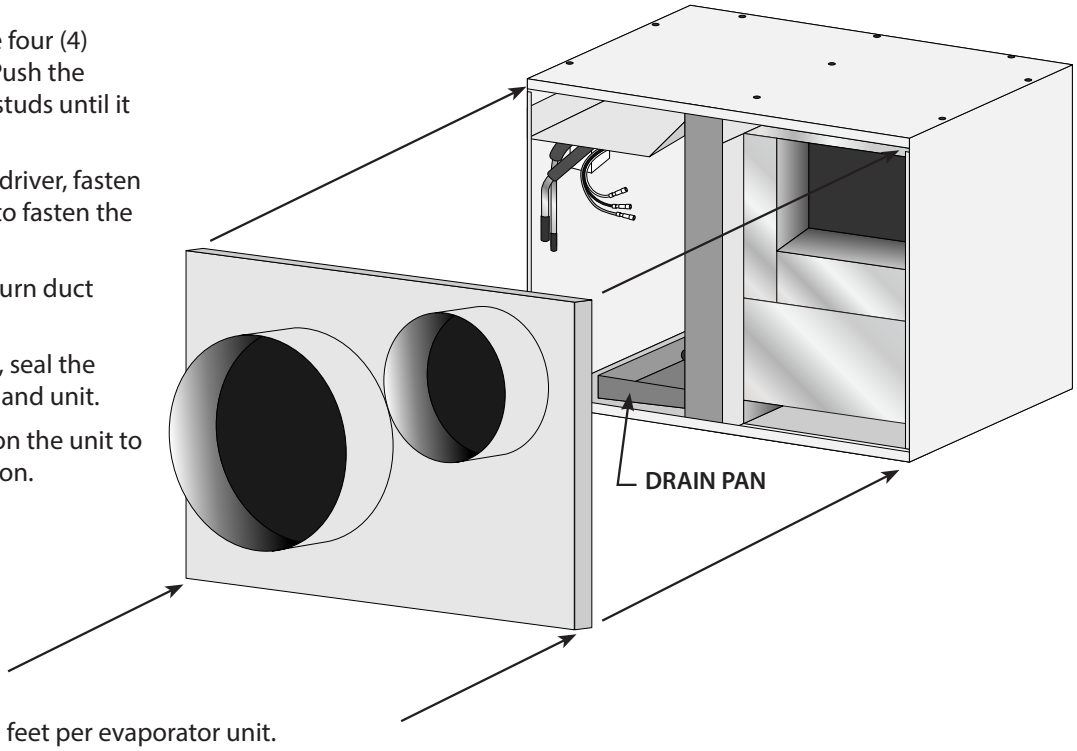

NOTE: Max ducting length is 25 feet per evaporator unit.

COPELAND WIRING PROCEDURE

Copeland Wiring Procedure

Step # 1

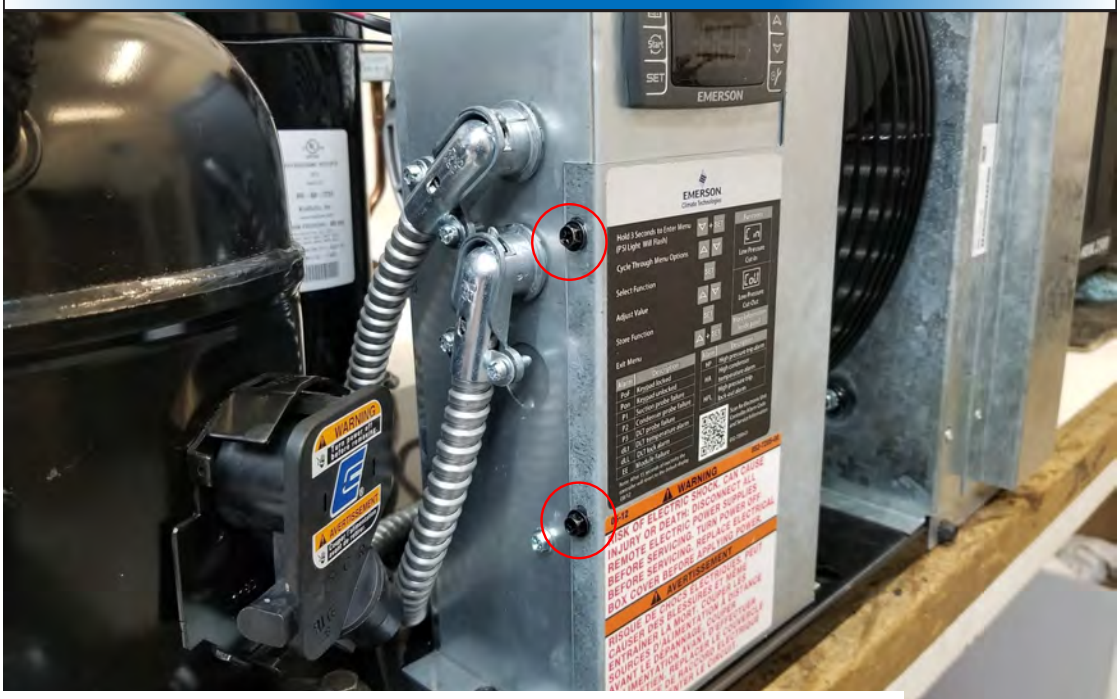

Use a ¼" nut driver to remove the screws securing the cover to the compressor electrical compartment.

Copeland Wiring Procedure

Step # 2

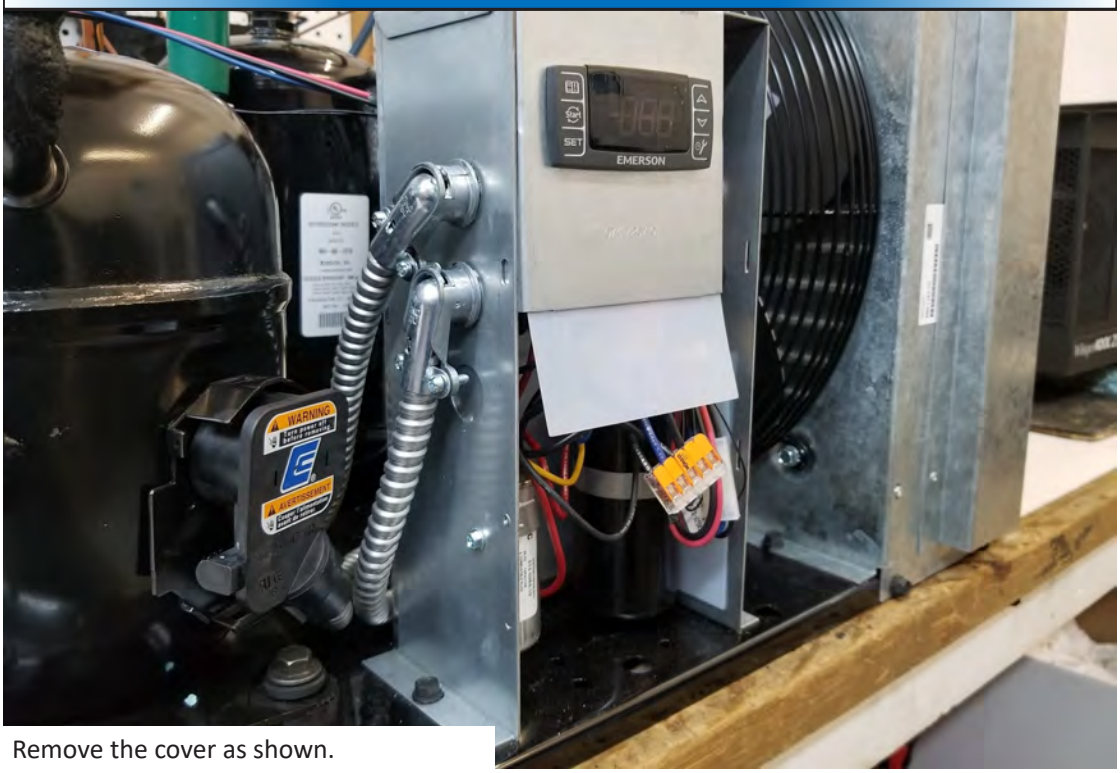

Remove the cover as shown.

Copeland Wiring Procedure

Step # 3

Pull the controller panel forward and rest it in the down position to expose the internal compartment.

Copeland Wiring Procedure

Step # 4

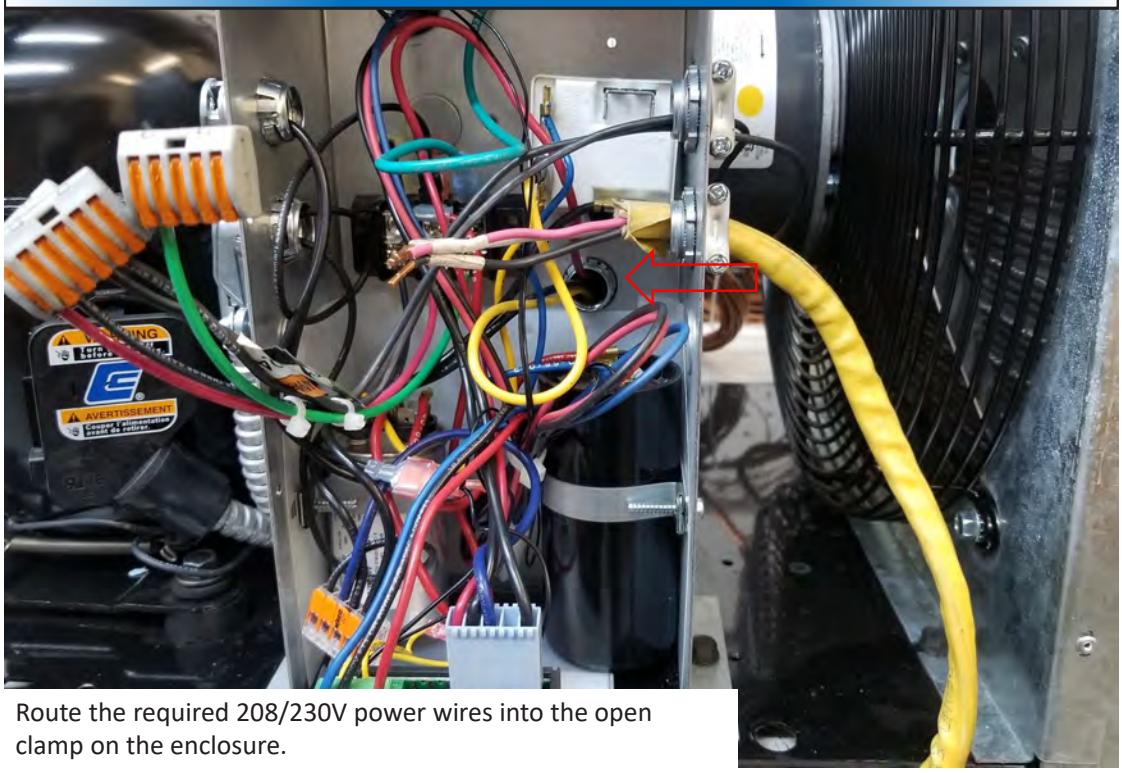

Route the required 208/230V power wires into the open clamp on the enclosure.

Copeland Wiring Procedure

Step # 5

Tighten the screws on the clamp to secure wire casing or conduit in place.

Copeland Wiring Procedure

Step # 6

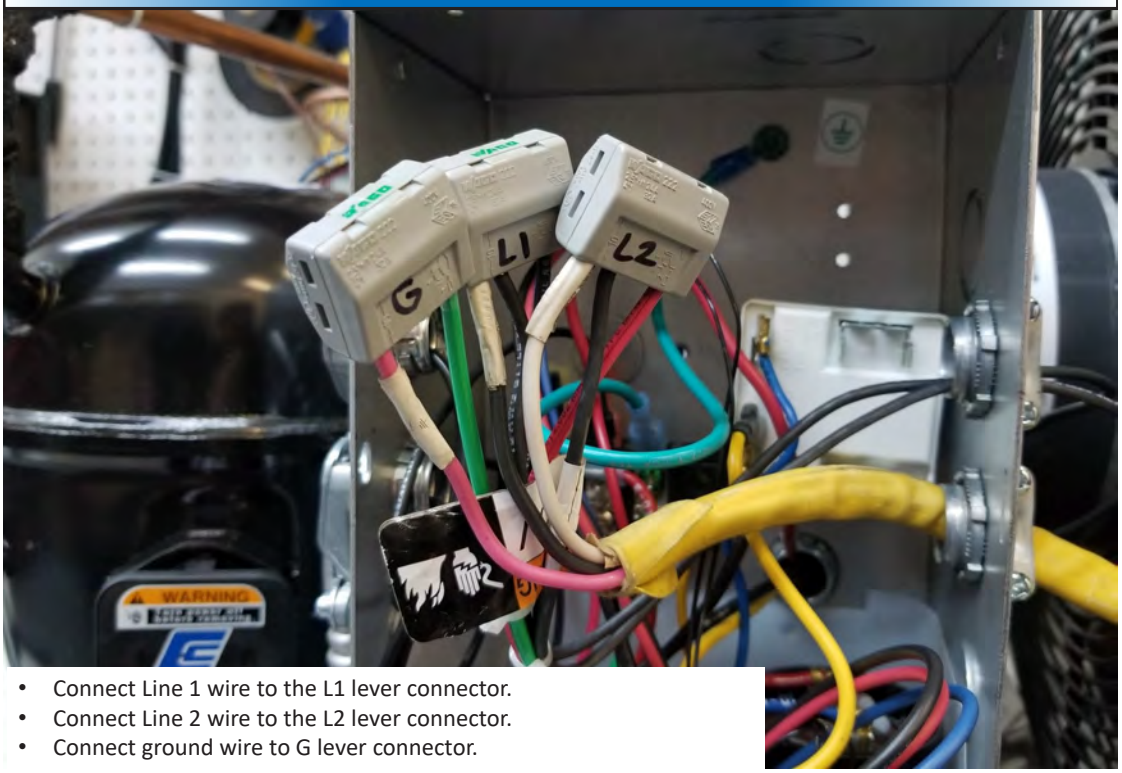

- Connect Line 1 wire to the L1 lever connector.
- Connect Line 2 wire to the L2 lever connector.
- Connect ground wire to G lever connector.

Copeland Wiring Procedure

Step # 7

Push wires back into enclosure and place the controller panel back in place..

Copeland Wiring Procedure

Step # 8

Re-install cover.

SYSTEM OPERATION

The cooling system is equipped with the hardware needed to support a 24-volt air conditioning thermostat (not included).

Initial Start-Up

Set the thermostat to COOL and fan switch to AUTO. Lower the setpoint to the desired cellar temperature. (A temperature of 55°F is the recommended setpoint.) See thermostat instructions for details.

Normal System Cycle

The thermostat should turn the cooling system on when it senses a temperature one (1) degree higher than the setpoint. See thermostat instructions for details.

Anti-Short Cycle

Most thermostats have a safety feature that will prevent the condensing unit from cycling on and off within a short period of time. During the anti-short cycle, the condensing unit will typically remain off for 5-7 minutes. See thermostat instructions for details.

Fan Operation

If the fan switch on the thermostat is in the AUTO position, it will run only during the cooling cycle. If the fan switch on the thermostat is in the ON position, the fan will continuously run until the switch is set back to the AUTO position.

Operation in Low Ambient Temperatures

The condensing unit comes equipped with a LAC (Low Ambient Control). The LAC is a three-way modulating valve that responds to discharge pressure. When the discharge pressure falls below the valve's dome pressure, the valve modulates open to the discharge port which allows discharge gas to bypass the condenser. Mixing the discharge gas with the liquid creates high pressure at the condenser outlet, reducing the flow and causing liquid to backup in the condenser. Flooding the condenser reduces the area available for condensing. This reduction in condenser surface area results in a rise in condensing pressure during cold ambient conditions.

The condensing unit controller is preset at the factory. The cut-in pressure is preset to 25psi and the cut-out pressure at 15psi. During low ambient temperatures (40°F or below), it will be necessary to adjust the cut-in pressure to 10-15psi (15psi is preferred) and the cut-out to 5psi to ensure compressor startup. See page 36 for instructions on adjusting the cut-in and cut-out pressures of the condensing unit.

NOTE: To ensure correct system operation, the 24V thermostat must be placed inside the wine cellar, preferably in a central location away from any airflow.

Emerson™ Electronic Unit Controller

Quick setup and troubleshooting guide

Adjusting Low Pressure Settings

Hold DOWN and SET simultaneously for 3 seconds to enter menu (PSI light will flash)	▽ + SET
Cycle through menu options – UP/DOWN	△ ▽
Select function – SET	SET
Adjust value – UP/DOWN	△ ▽
Store function - SET	SET
Exit menu - UP and SET	△ + SET

Low Pressure Cut-In

Low Pressure Cut-Out

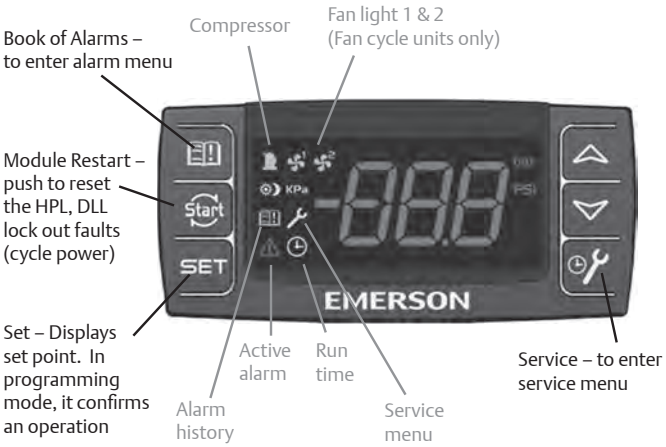

When light is on, feature or component is on or active

Accessing Alarm Code Information

Press and release ALARM	
Cycle through menu options – UP/DOWN	△ ▽
Press SET to see number of alarms	SET
Press SET again to return to menu options	SET
Exit menu - UP and SET	△ + SET

Alarm	Description
PoF	Keypad locked
Pon	Keypad unlocked
P1	Suction probe failure
P2	Condenser probe failure
P3	DLT probe failure
HA	High condenser temperature alarm
dLt	DLT temperature alarm
dLL	DLT lock alarm
HP	High pressure trip alarm
HPL	High pressure trip lock-out alarm
EE	Module Failure
LOC	Number of lock-outs

Note: After 15 seconds of inactivity the controller will revert to the default display.

Accessing Service Menu

Hold SERVICE for 3 seconds	
Cycle through menu options – UP/DOWN	△ ▽
Press SET to see number of alarms	SET
Press SET again to return to menu options	SET
Exit menu - UP and SET	△ + SET

Code	Description
StH	CompressorStarts –1000 -999999
StL	Compressor Starts –0 -999
CHH	CompressorHours -1000 -999999
CHL	Compressor Hours -0 -999
F1H	Fan 1 Hours -1000 -999999
F1L	Fan 1 Hours-0 -999
F2H	Fan 2 Hours -1000 -999999
F2L	Fand 2 Hours -0 -999
Example: If StH=12 and StL=500, the total number of compressor starts=12,500	

For more information visit
EmersonClimate.com/ElectronicUnitController
or call 1-888-367-9950

EMERSON
Climate Technologies

Display	Likely Causes	Other Possible Causes
Controller display remains blank after applying power	• Unit power not properly applied - check for proper applied voltage • Power cable harness not plugged in properly or securely into the back of the controller – check connections	• Power cable miswired – inspect cable, replace if needed • Electrical assembly miswired – trace wiring diagrams
Controller displays correctly, but the green compressor light is off and the compressor is not running	• Jumper cable not plugged in properly or securely into the back of the controller – check connections • Controller is currently above the cut-in setting – check cut-in and cut-out settings	• Jumper cable miswired – inspect cable, replace if needed
Controller displays correctly and the green compressor light is on and the compressor is not running	• Power cable harness not plugged in properly or securely into the back of the controller – check connections	• Power cable not wired to the contactor or compressor correctly, check wiring • Power cable miswired – inspect cable, replace if needed
Controller flashes “135” or “P1”	• Current system pressure is above 135 PSIG – wait for system to pull down • Green harness not plugged in properly or securely into the back of the controller – check connections • Cable not connected properly with the pressure transducer – check connections	• Transducer cable miswired – inspect cable, replace if needed • Damaged transducer – inspect transducer, replace if needed
Controller flashes “P2” on a unit with fan cycling	• Green harness not plugged in properly or securely into the back of the controller – check connections	• Transducer cable miswired – inspect cable, replace if needed • Check condenser temperature sensor resistance values against table in AE-1376, Section 8
Controller flashes “P2” on a unit without fan cycling after replacing a controller	• Controller not programmed properly – check parameters in the advanced menu	
Controller flashes “P3” on a unit with DLT	• Jumper cable not plugged in properly or securely into the back of the controller – check connections	• Jumper cable miswired – inspect cable, replace if needed • Faulty DLT temperature sensor – check the discharge line temperature sensor resistance values against table in AE-1376, Section 8
Controller flashes “P3” on a unit without DLT after replacing a controller	• Controller not programmed properly – check parameters in the advanced menu	
Fans not running on a fan cycling unit and the fan lights are not on	• Condensing temperature is currently below the fan cut-in • Condensing temperature sensor not properly installed – check installation	• Transducer cable miswired – inspect cable, replace if needed • Faulty temperature sensor - check condenser temperature sensor resistance values against table in AE-1376, Section 8
Fans not running on a fan cycling unit and the fan lights are on	• Power cable harness not plugged in properly or securely into the back of the controller – check connections	• Power cable miswired – inspect cable, replace if needed • Electrical assembly miswired – trace wiring diagrams
Controller flashes “HP” at power-up	• Jumper cable not plugged in properly or securely into the back of the controller – check connections • High pressure switch is seeing above the cut-out pressure • For a replacing an -00 controller, ensure that the jumper cable is the latest revision. It should have a blue wire in the harness. See replacement instructions for more details	• Jumper cable miswired – inspect cable, replace if needed • Faulty fixed Hp switch – inspect switch, replace if needed
Controller flashes “HP” or “HPL”	• System operation causing high discharge pressures, check system operations	• Bad high pressure switch, verify system pressure when the pressure switch trips. • See AE-1376, Section 7.2 for more details
Controller flashes “DLT” or “DLL”	• System operation causing high discharge line temperatures, check system operations	• Faulty temperature sensor - check DLT sensor values against table in section 8 • See AE-1376, Section 7.1 for more details
Controller flashing “HPL” or “DLL”	• System operation causing high discharge pressures (HPL) or high discharge line temperatures (DLL) repeatedly, check system operations • To clear an “HPL” or “DLL” lockout, you can hold the Restart button for 3 seconds twice, or cycle power to the unit. If using the reset button, the alarm condition will have to clear (DLT temperature drops or Hp switch resets), and any minimum off time will need to complete (5 minutes for the fixed Hp switch)	

EmersonClimate.com/ElectronicUnitController

2013ECT-46 (9/13) Emerson is a trademark of Emerson Electric Co. ©2013 Emerson Climate Technologies, Inc. All rights reserved.

EMERSON. CONSIDER IT SOLVED.™

CELLARCOOL TROUBLESHOOTING GUIDE

Ice forming on the evaporator units	
Possible cause	**Solution**
Evaporator filters or coils are dirty	Remove the filters and wash them, then clean the coils with a vacuum. If coils are very dirty, use a spray bottle with a small amount of liquid dish detergent or coil cleaner. Spray coils, let set for five minutes, then flush with fresh water.
There is something blocking the supply and/or return air	Remove blockage
The evaporator fans are not turning on	Call customer service for details on how to perform the bypass plug test. If all components run correctly, and the system cools during the bypass plug test, there is either an issue with the 24V thermostat conversion kit or the thermostat. Contact customer service for further action.
If evaporator units continue to ice	Observe ice formation pattern. If only part way up the coil face, the system could be low on refrigerant. If all the way up, the coils may be dirty or airflow is blocked.
The setpoint is too low	Raise setpoint to recommended temperature of 55°F

System does not run/power up	
Possible cause	**Solution**
Evaporator units are not plugged in	Make sure the units are plugged into an outlet
Power switch not on	Turn unit on by pressing the power button on the control
Line voltage rating is incorrect for the system	Check line voltage to make sure there is 110V-120V
Thermostat not calling for cooling	Adjust thermostat to a lower temperature
Faulty thermostat or wiring	Call Customer Service at 1-800-343-9463

Cellar temperature is too warm	
Possible cause	**Solution**
The temperature of the room to which the condensing unit exhausts exceeds 110°F	Intake temperature needs to drop below 110°F
The system is undersized for the cellar	Order correctly sized system
There is something blocking the supply and/or return air on the evaporator units or the condensing unit	Remove airflow obstruction(s)
Evaporator units are mounted too low in the cellar	Relocate units so the distance from the ceiling and top of the units is no more than 18”
One or more of the fans is not turning on	Please contact the installing technician to troubleshoot
Compressor is not turning on	Please contact the installing technician to troubleshoot
Compressor keeps cycling on overload	Make sure all fans are working and there is no airflow obstruction
Poor seal around door or other areas requiring a seal (around the unit, wall joints, etc.)	Make sure there are no air gaps around the door. If door seal is damaged, replace it.
Thermostat set too high	Adjust thermostat to a lower temperature
Evaporator coils are frosted or iced up	Observe ice formation pattern. If only part way up the coil face, evaporator units could be low on refrigerant. If so, contact your installing technician to assist with troubleshooting.

System runs constantly	
Possible cause	**Solution**
Leaky door seal or poorly insulated cellar	Fix leaky door seal and insulate cellar

Units leak water	
Possible cause	**Solution**
Evaporator units are not level	Evaporator units should be level on the wall to prevent leaking
Drain lines clogged or kinked	Check drain lines to make sure water can flow freely
Drains are clogged, preventing water from escaping	Disconnect drains and clear them out; check drains for blockage
Drain lines do not have a downward slope	Fix drain lines so there is a downward slope from the units to the drains
Coils are iced, causing drain pans to freeze and water to overflow	Melt ice with blow drier. Soak up with a towel.
System runs but does not cool	
Possible cause	**Solution**
Lack of air flow	Make sure fans are unobstructed and that the evaporator filters, evaporator coils, and condenser coils are clean and free of debris
System undersized	Contact Customer Service at 1-800-343-9463
Compressor is overheating	Shut system off for 1 hour to allow compressor to cool. Turn back on and check for cooler air flow out. If compressor runs, check for and clean condenser coil as possible cause of compressor overheating. If problem repeats, contact you installing technician to assist with troubleshooting.
Evaporator fan runs but compressor does not	
Possible cause	**Solution**
Compressor and/or starting components faulty	Please contact the installing technician to troubleshoot
Compressor may have overheated	Shut system off for 1 hour to allow compressor to cool. Turn back on and check for cooler air flow out. If compressor runs, check for and clean condenser coil as possible cause of compressor overheating. If problem repeats, contact your installing technician to assist with troubleshooting.
Thermostat not sending power to Y terminal	Call customer service for details on how to perform bypass plug test
24V thermostat conversion kit solenoid relay not working correctly	Call customer service for details on how to perform bypass plug test
Compressor runs but evaporator fan does not	
Possible cause	**Solution**
Faulty fan motor	Please contact the installing technician to troubleshoot
Faulty thermostat	Please contact the installing technician to troubleshoot
Compressor short cycles	
Possible cause	**Solution**
Master evaporator unit's thermostat location	Move thermostat out of airflow
System low on refrigerant charge	Please contact the installing technician to troubleshoot
Condensing fan motor/capacitor faulty	Please contact the installing technician to troubleshoot
Compressor and /or starting components faulty	Please contact the installing technician to troubleshoot
Humidity in cellar too low	
Possible cause	**Solution**
Not enough moisture	Purchase and place a humidifier (or a decorative fountain) in cellar

Units equipped with the 24V Thermostat Conversion Kit:

System does not power up/run	
Possible cause	**Solution**
Batteries on thermostat have lost their charge	Change batteries
Thermostat wired incorrectly	Check wiring on 24V thermostat and correct
Wiring issue at master evaporator unit	Contact Customer Service for troubleshooting
24V transformer in master evaporator unit has failed	Contact Customer Service for troubleshooting
Evaporator fans run continuously	
Possible cause	**Solution**
Fan switch on thermostat set to "on"	Set fan switch to the "auto" position
Fan relay in thermostat or 24V conversion kit stuck on	Call Customer Service for details on how to perform the bypass plug test

MAINTENANCE SCHEDULE

Monthly	1. Check coils 2. Check for unusual noise or vibration 3. Check the drain lines to see if they are above the waterline (if draining into a vessel)
Quarterly	1. Use a vacuum with brush attachment to clean coils; be careful not to crush coil fins when cleaning 2. Change duct filters if the system is ducted
Annually	1. Inspect for corrosion 2. Check wiring connections and integrity of cords 3. Pour a 50/50 bleach solution into the drain lines every spring

EMERSON Climate Technologies

Application Engineering BULLETIN

Copeland brand products

AE5-1340 **October 2006**

Care and Cleaning of Air Cooled Condensing Units

Introduction

Proper care is essential to assure good life of condensing units. Dirty or damaged condensers will reduce the efficiency and capacity of the system.

Care must be taken in choosing solutions to be used for cleaning condensers and condensate pans. Chlorinated cleaners and anti-bacterial cleaning agents can be damaging and should be avoided. Caustic and acidic cleaners should be avoided as well. Failure to do so may accelerate component corrosion and ultimately lead to component failure.

Condenser Coils

There are many commercially available condenser coil cleaners on the market. Coil cleaners should be designed to remove build-up on fins and coils. Coils should be thoroughly rinsed of the cleaners once cleaning has been completed. Follow the manufactures instruction for proper usage. Preventive maintenance and routine cleaning of coils is important to assure good life.

When cleaning the coil, an absorbent type material should be placed under the area to be cleaned in order to capture most of the cleaning compound, thus minimizing any type of chemical attack.

Condensate Pans

Condensing units with condensate pans and condensate tubes are designed to evaporate condensate water only. Other ingredients introduced into the condensate pan can accelerate pan and/or tube corrosion. As foreign agents are introduced into the condensate pan, condensate water will be evaporated leaving the foreign agent behind. This can lead to a high concentration of the agent and possible corrosion of the tubing and/or base.

Coil cleaning agents must not be allowed to drain into the condensate pan as this may cause damage. Upon completing the coil cleaning, be certain that all residue is removed from the condensate pan.

Only non corrosive cleaners should be used to assure good life of the condensing unit components. No hydrocarbon based cleaners should be used to clean the unit. Bleach solutions must be avoided due to its high corrosive nature.

Under no circumstances should cleaning agent ingredients contain any of the solutions listed below:

Unacceptable solutions are:

- **Chlorinated Solvents**
- **Bleaches**
- **Vinegar**
- **Ammonia**
- **Anti-Bacterials**
- **Salts**

Preventative Maintenance

Maintenance should be performed at regular intervals. Coils should be cleaned at least monthly, possibly more depending on the environment. Condensing units with condensate pans should also be checked and cleaned regularly to prevent damaging build up in the pan.

Safety

Please follow all safety recommendations listed by the manufacturer of the cleaning agent(s), these would include proper clothing, gloves and eye protection.

BYPASS TEST PROCEDURE

NOTE: If instructed by a CellarCool representative, follow the directions below to test the cooling unit using the bypass plug provided in the accessory kit.

1. Disconnect power from the evaporator units.
2. Loosen the two (2) screws on the front of the grille or duct plenum.
3. Pull the grille or duct plenum away from the evaporator units.
4. Remove the screw securing the control panel in place.
5. Slide the control panel down, out of the evaporator housing. The control panel has two (2) hooks which allow it to attach to the evaporator units for easy serviceability.
6. Disconnect the Molex connector labeled #4.
7. Locate the bypass plug included in the accessory kit.
8. Plug the bypass plug into the male Molex connector.
9. Connect power to the evaporator units. The system should immediately turn on. If all the components are not operational, disconnect power immediately and contact customer service. If all components seem to be operating correctly, allow the system to run for four (4) hours. Monitor the temperature of the cellar to determine if the system is cooling properly.
10. Once the test is complete, remove the bypass plug. Plug the Molex connector back in to the system's wiring.
11. Replace the control and faceplate.

TECHNICAL ASSISTANCE

CellarCool Customer Service is available Monday through Friday from 6:00 a.m. to 4:00 p.m. Pacific Standard Time.

The appointed customer service representative will be able to assist you with your questions and warranty information more effectively if you provide them with the following:

- The model and serial number of your CellarCool system(s).
- Location of unit and installation details, such as ventilation, ducting, construction of your wine cellar, and room size.
- Photos of the cellar and installation location may be needed.

Contact CellarCool Customer Service

1738 E. Alpine Ave
Stockton, CA, 95205
www.cellarcool.com

Email: support@cellarcool.com
Tech Support & Customer Service: 1-800-343-9463
Sales & Sizing Assistance: 1-855-235-5271
Fax: 209-466-4606

Visit www.emersonclimate.com/electronicunitcontroller for online brochures, bulletins, instruction videos, and general product information.

Download the Copeland Mobile App on your mobile device for additional troubleshooting and technical information.

ACCESSORIES FOR COOLING UNITS

CellarCool offers accessories to enhance and customize your wine cooling unit.

Condensate Pump Kit

The condensate pump kit automatically removes water that drips out of the evaporator units' drain lines. The pump is controlled by a float/switch mechanism that turns the pump on when approximately 2¼" of water collects in the tank, and automatically switches off when the tank drains to approximately 1¼". The condensate pump kit allows the excess condensate to be pumped up to 20 feet away from the unit.

Exterior Housing

If the cooling unit is installed outside, it will need protection from sun, wind, and rain. The exterior housing protects the condensing unit portion of the split system from the elements when installed outdoors.

Accessories can be purchased at www.cellarcool.com

CellarCool Product Terms and Conditions
Including Product Limited Warranty And Product Installation Requirements
For CellarCool Split System Series

ATTENTION: PLEASE READ THESE TERMS OF USE CAREFULLY BEFORE INSTALLING YOUR CELLARCOOL COOLING SYSTEM. INSTALLING YOUR CELLARCOOL COOLING SYSTEM INDICATES THAT YOU ACCEPT AND AGREE TO EACH OF THE TERMS AND CONDITIONS SET FORTH HEREIN ("TERMS OF USE"). IF YOU DO NOT ACCEPT THESE TERMS OF USE, YOU RISK VOIDING YOUR WARRANTY AND ASSUMING ADDITIONAL REPAIR AND REPLACEMENT COSTS.

1. Purchase of a CellarCool Cooling System assumes that the Purchaser ("End User") fully accepts and agrees to the Terms and Conditions set forth in this document. The Terms and Conditions of Sale and Owner's Manual are shipped with each unit and, if another copy is needed, replacement copies can be downloaded from the company website (cellarcool.com) or by contacting CellarCool directly for a new copy. CellarCool reserves the right, in its sole discretion, to change its Terms and Conditions at any time, for any reason, without notice.

2. CellarCool Product Installation and Limited Warranty

A. Purchaser of the product must arrange for the product to be installed by a certified HVAC/R technician in accordance with procedures set forth by CellarCool and described in the CellarCool Owner's Manual.

B. The HVAC/R technician installing the product must complete the designated portion of the Split Startup Checklist and provide licensing or certification identification number information to assist in the warranty registration process.

C. Purchaser must return the completed Split Startup Checklist to CellarCool within thirty (30) days of installation of Product. The Split Startup Checklist must be approved by CellarCool to activate the Limited Warranty. If the Split Startup Checklist is approved, Purchaser will be sent activation approval documents and will start receiving the benefits of the Limited Warranty throughout the warranty period. If the Split Startup Checklist is incomplete, Purchaser will be informed they have five days to complete the Split Startup Checklist and re-submit to CellarCool. The Split Startup Checklist will be reviewed again, and if denied, Purchaser will be informed that they have 10 business days for corrective action. Failure to register the Product may result in loss of warranty.

D. Purchaser is responsible for the full costs of installation and any additional parts required for the proper and complete installation of the product.

E. For Split Systems returned to CellarCool in accordance with the terms and conditions of the Limited Warranty, CellarCool warrants against defects in material and workmanship as follows:

1. LABOR - For a period of two (2) years commencing on the date of purchase, CellarCool will, at its option and discretion, reimburse up to $250 to the End User for cost incurred for servicing, repairing, removing or installing warranty parts. Invoice for service must be forwarded to CellarCool for assessment and processing. The Split System warranty is invalid if there is attempted repair by anyone other than an HVAC/R technician approved by CellarCool to service the Product.

2. PARTS - For a period of two (2) years commencing on the date of purchase, CellarCool will supply, at no charge, new or rebuilt replacement parts in exchange for defective parts. Replacement parts are warranted only for the remainder of the original warranty period.

3. FREIGHT - For a period of two (2) years commencing on the date of purchase, if after CellarCool approved evaluation the original Product failure is determined to be the cause of a manufacturers defect, and not the cause of an installation error or other cause, CellarCool will cover at its option, freight for the replacement parts or Product.

The following part or cause of failure is not the responsibility of CellarCool:

- Improper voltage supply
- Line set with screw connectors (high end and low end)
- Leaks found at the braze points when performing pressure check
- Unit that has been charged incorrectly
- Incorrect tubing diameter used on line set
- A unit that has been wired incorrectly
- Valve stem on condenser side
- Improper installation of P-Trap
- Lack of P-Trap (if required)
- Condensers that are installed outdoors or in elements that would affect operation without proper cover or housing. (Housing is available from Manufacturer).

Product Warranty Limitations and Exclusions.

1. This limited warranty does not cover cosmetic damage caused during installation, damage due to acts of God, commercial use, accident, misuse, abuse, negligence, or modification to any part of the Product. Delivery and installation of the Product, any additional parts required, as well as removal of the Product if warranty work is required, are all at the sole cost, risk and obligation of the End User.
2. This limited warranty does not cover damage due to improper installation or operation or lack of proper maintenance of the Product, connection of the Product to improper voltage supply, or attempted repair of the Product by anyone other than a technician approved by CellarCool to service the Product.
3. This limited warranty does not cover any Product sold "AS IS" or "WITH ALL FAULTS."
4. Product that has been replaced during warranty period does not extend the warranty period past the original date of purchase.
5. This limited warranty is valid only in the continental United States. Sales elsewhere are excluded from this warranty.
6. Proof of purchase of the Product in the form of a bill of sale, receipted invoice or serial number, which is evidence that the Product is within the Limited Warranty Period, must be presented by the End User to CellarCool in order to obtain limited warranty service.
7. This limited warranty is void if the factory applied serial number has been altered or removed from the Product.
8. This limited warranty is voided if installed in an enclosure of insufficient design that does not follow the Product installation requirements stated herein and in the owner's manual.
9. Removing the rivets from the Product's unit housing without prior authorization from CellarCool voids this limited warranty.
10. The End User must first contact CellarCool Customer Service by telephone (at 1-800-343-9463) prior to attempting service on any Product still under the limited warranty; else the limited warranty is voided.
11. 11. This limited warranty does not cover Product being concealed by, but not limited to, vegetation, fabric, shelving, mud, snow, or dirt. Product must not be painted or limited warranty will be void.
12. This limited warranty does not cover exposure to corroding environments such as, but not limited to, petroleum and gasoline products, cleaning solvents, caustic pool chemicals, and marine air.
13. This limited warranty does not cover any cause not relating to Product defect.
14. THE REPAIR OR REPLACEMENT OF THE PRODUCT AS PROVIDED UNDER THIS LIMITED WARRANTY IS THE EXCLUSIVE REMEDY OF YOU, THE END USER, AS WELL AS ANYONE ELSE IN THE CHAIN OF TITLE OF THE PRODUCT, DOES NOT START A NEW LIMITED WARRANTY TIME PERIOD, AND IS IN LIEU OF ALL OTHER WARRANTIES (EXPRESS OR IMPLIED) WITH REGARD TO THE PRODUCT. IN NO EVENT SHALL CELLARCOOL BE LIABLE FOR INCIDENTAL, CONSEQUENTIAL, SPECIAL OR CONTINGENT DAMAGES FOR BREACH OF ANY EXPRESS OR IMPLIED WARRANTY ON THIS PRODUCT. THE IMPLIED WARRANTIES OF MERCHANTABILITY

AND FITNESS FOR A PARTICULAR PURPOSE ARE HEREBY EXPRESSLY DISCLAIMED. Some states do not allow the exclusion or limitation of incidental or consequential damages, or allow limitations on how long an implied warranty lasts, so the above limitations or exclusions may not apply to you. This limited warranty gives you specific legal rights, and you may have other rights, which vary from state to state.

15. Failure of the End User to comply with all of the Product Installation Requirements, Maintenance Requirements and End User Requirements may, at CellarCool's sole discretion, void this limited warranty.
16. No one has any authority to add to or vary the limited warranty on this Product.

3. Maintenance Requirements

The End User is responsible for checking the coils on the condenser unit and vacuuming them every three months to maintain them free of debris. It is the End User's responsibility to clean off any accumulated dust, lint, or other debris from the front and rear intake grills; failure to do this on a regular basis will restrict the airflow and may affect the Product's ability to function properly. Periodically cleaning the Product's vents will help assure maximum cooling efficiency. The drain tube must also be checked and kept clean and free of debris and mold to maintain proper performance.

Mold is a natural living organism in the environment. It exists in the air in the form of microscopic spores that move in and out of buildings through doors, windows, vents, HVAC systems and anywhere else that air enters. Once it is discovered, mold must be addressed quickly and appropriately. Delayed or improper treatment of mold issues can result in costly and reoccurring repairs. If the End User suspects a mold problem, it is always best to hire a qualified and experienced mold remediation specialist.

4. Additional End User Costs And Responsibilities

Terms and conditions for replacing the Product that is being evaluated for limited warranty.

1. After evaluation by a certified HVAC/R technician and the Product is found to be irreparable in the field, contact CellarCool Customer Service to arrange for replacement under the warranty guidelines. When a claim for warranty is submitted for a condenser skid, the End User must purchase a new condenser skid from CellarCool at retail price. Upon installation of the new condenser skid by a certified HVAC/R Technician, the HVAC/R Technician must complete the Installation Checklist and End User must submit the Installation Checklist to CellarCool Customer Service for approval. The original condenser skid must be returned within 21 days to CellarCool for failure analysis. If the Installation Checklist is approved and the failure is evaluated as defective and not installation error or other reason, the End User will be refunded for the cost of the replacement skid.
2. If the Product failure is evaluated and it is determined that it is an installation error or other reason, all costs, including shipping will be the responsibility of the End User.

The following items are not covered under any warranty and are the sole responsibility of the End User:

A. End Users should satisfy themselves that the Product they are purchasing is suitable for their particular needs and requirements, and thus no responsibility will be placed with CellarCool for the End User's decisions in this regard.

B. End Users must assure that the product is installed by a certified HVAC/R technician. Failure to do so will result in Voiding the Limited Warranty.

C. It is the End User's responsibility to secure safe haven/storage for ANY AND ALL items that are being kept and stored in the End User's wine cellar, including any Product. CellarCool takes no responsibility for the safety and preservation of the aforementioned items in the event that the environment becomes unsuitable to maintain a proper storage environment.

D. End User is responsible for initial installation costs, including, but not limited to, labor costs and the cost of any additional parts necessary to complete the installation.

E. End User is responsible for all costs incurred for the installation and/or removal of the Product, or any part thereof, unless such cost has been agreed by CellarCool to be a warranty repair prior to the work being performed.

5. Sales and Use Tax

CellarCool only collects California sales tax for orders shipped within the State of California; CellarCool does not collect sales tax for orders shipped to other states. However, the Purchaser and the End User may be liable to the taxing authority in their state for sales tax and/or use tax on the Product. The Purchaser and the End User should each check with their state's taxing authority for sales and use tax regulations.

6. Customer Service and Troubleshooting

CellarCool's customer service department is available to answer any questions or inquiries for End Users regarding a CellarCool Product, as well as to assist in performing basic troubleshooting, Monday through Friday, from 6:30 a.m. to 4:00 p.m. PST, at telephone number 1-800-343-9463. CellarCool reserves the right to have a certified, CellarCool-approved, HVAC/R technician go on site and inspect the product if the initial trouble shooting warrants further investigation. CellarCool Corporation is located at 1738 East Alpine Avenue, Stockton, California 95205.

7. Request for Product Evaluation and Repair Under Warranty

SPLIT SYSTEM FIELD SERVICE WARRANTY POLICY: This Policy is to clarify what falls under Warranty Service and what becomes the responsibility of the Owner. CellarCool ("manufacturer") strives to provide our customers with a superior Product and we back our Product with a Two Year Limited Warranty. Please review the CellarCool Product Terms and Conditions including Product Limited Warranty and Product Installation Requirements to ensure you have a complete understanding of our Policy and coverage of your Split System.

ARBITRATION: Any disputes arising out of or in connection with the installation and warranty of the Split System shall be referred to and finally resolved by a CellarCool approved Independent Certified HVAC/R Technician. The evaluation of the Technician on all issues or matters of identifying the responsible party (CellarCool or Installing Technician) shall be determined in a written report. This report will be made available to all concerned parties. If discovered under warranty, CellarCool will assume the financial responsibility under their warranty guidelines. If the report finds the Owner's Installer as the responsible party, CellarCool will provide all documentation to the customer to substantiate the findings. This will include the Invoice from the Independent Certified HVAC/R Technician and the written report of the findings. The Owner will become responsible for payment directly to CellarCool for all charges incurred for repairs (labor, parts and shipping costs) on the Split System.

8. Miscellaneous Terms and Conditions

A. Return Policy. All return inquiries must be made within thirty (30) calendar days of the original purchase of a Product and are subject to a twenty five percent (25%) restocking fee. Shipping costs are not refundable and the Purchaser is responsible for all return shipping costs (including customs fees and duties, if applicable).

B. Security Interest. CellarCool retains a security interest in each Product until payment in full.

C. Construction and Severability. Every provision of these Terms and Conditions shall be construed, to the extent possible, so as to be valid and enforceable. If any provision of these Terms and Conditions is held by a court of competent jurisdiction to be invalid, illegal or otherwise unenforceable, such provision will, to the extent so held, be deemed severed from the contract of sale between Purchaser and CellarCool, and all of the other non-severed provisions will remain in full force and effect.

D. Governing Law/Choice of Forum. The laws of the State of California (without regard for conflicts of law) shall govern the construction and enforcement of the these Terms and Conditions of Sale (Sections 1 through 9 inclusive, including Product Limited Warranty And Product Installation Requirements), and further these Terms and Conditions of Sale shall be interpreted as through drafted jointly by CellarCool and Purchaser. Any dispute will be resolved by the courts in and for the County of San Joaquin, State of California, and all parties, CellarCool, Purchaser and End User, hereby irrevocably submit to the personal jurisdiction of such courts for that purpose. No waiver by CellarCool of any breach or default of the contract of sale (including these Terms and Conditions of Sale) concerning a Product will be deemed to be a waiver of any preceding or subsequent breach or default.

E. Correction of Errors and Inaccuracies. These Terms and Conditions may contain typographical errors or other errors or inaccuracies. CellarCool reserves the right to correct any errors, inaccuracies or omissions, and to change or update these Terms and Conditions, at any time without prior notice.

9. Questions, Additional Information And Technical Assistance

A. Questions. If you have any questions regarding these Terms and Conditions or wish to obtain additional information, contact us via phone at 1-800-343-9463 or please send a letter via U.S. Mail to:

Customer Service
CellarCool Corporation
1738 E Alpine Ave
Stockton, CA 95205

Email: support@cellarcool.com
Web: www.cellarcool.com

B. Technical Assistance. CellarCool Customer Service is available Monday through Friday from 6:30 a.m. to 4:00 p.m. PST. The Customer Service representative will be able to assist you with your questions and warranty information more effectively if you provide them with the following:

1. The model and serial number of your CellarCool UNIT.
2. The location of the system and installation details, such as ventilation, construction of your wine cellar, and room size.

Model _____ **Serial Number** _____

Installed by _____ **Date** _____

CellarCool

CellarCool
1738 E. Alpine Ave
Stockton, CA 95205
1(800) 343-9463
www.cellarcool.com